YAMAHA

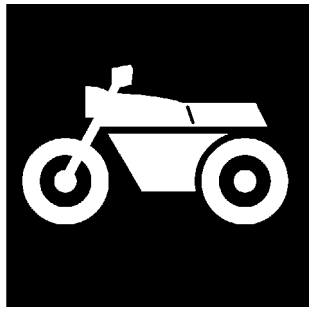

# PARTS CATALOGUE

# YZF-R6 (5SLM) EUROPE,SOUTH AFRICA
# YZF-R6 (5SLP) AUSTRALIA

1D5SL-300E1

(2D5SL-300E1)

YAMAHA GENUINE Parts & Accessories

A2

YZF-R6
PARTS CATALOGUE
©2004 by Yamaha Motor Co., Ltd.
1st edition, September 2004
All rights reserved.
Any reprinting or unauthorized use
without the written permission of
Yamaha Motor Co., Ltd.
is expressly prohibited.
Printed in Japan.

A3

**YZF-R6**

**A4**

# FOREWORD

This Parts Catalogue is related to the parts for the model(s) on the cover page. When you are ordering replacement parts, please refer to this Parts Catalogue and quote both part numbers and part names correctly.

1. Modifications or additions which have been made after the issue of the Parts Catalogue will be announced in the Parts News.
   It is advisable that you make the necessary corrections to the Parts Catalogue according to the Parts News.

2. Abbreviations
   The following abbreviations are used in this Parts Catalogue.

   "UR" Use specified parts number.
   "UN" Use as many as needed.
   "AP" Alternate Parts
   "LM" Locally Made (Parts need to be ordered locally)
   "F#" Frame No. (Applicable machine No.)
   "O/S" Over Size

3. The number of components for assembly
   - Parts, which are to be supplied in an assembly, are listed with a dot (.) in front of the part name as shown below.
   - The numeral appearing to the right of each component part indicates the quantity of parts for each assembly unit.

| PART NO. | DESCRIPTION | Q'TY | REMARKS |
|---|---|---|---|
| 2F5–83310–60 | FRONT FLASHER LIGHT ASSY | 2 | |
| 115–83311–60 | .BULB (6V–18W) | 1 | |

4. Applicable colours of graphics are represented in the "REMARKS" as shown below.

| PART NO. | DESCRIPTION | Q'TY | REMARKS |
|---|---|---|---|
| 2N4–24110–00–X5 | FUEL TANK COMP. | 2 | MXR |
| 3J1–24240–10 | .GRAPHIC, FUEL TANK | 1 | FOR MXR |

5. Note that the illustrations for reference in finding parts numbers are not to be used for assembling. When assembling, please use the applicable service manual.

6. The asterisk (*) before a reference number indicates modified items after the first edition.

7. Applicable Serial No.

Engine Serial No.

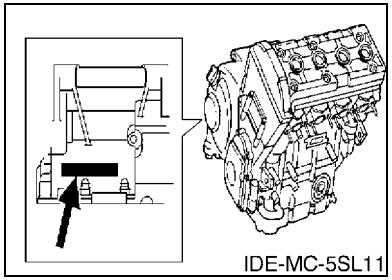


Frame Serial No.

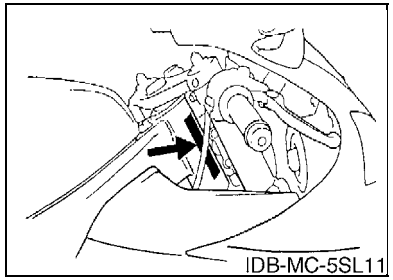


8. Applicable Colour Code (The (*) mark shows Model colour.)

| Abbreviation | Colour Name | Colour Code |
|---|---|---|
| DPBMC(*) | DEEP PURPLISH BLUE METALLIC C | 0564 |
| LGB | LOW GLOSS BLACK | 0098 |
| MBL2 | MAT BLACK 2 | 0582 |
| SMX(*) | BLACK METALLIC X | 0903 |
| VRC1(*) | VIVID RED COCKTAIL 1 | 0121 |
| | | |
| | | |
| | | |
| | | |
| | | |

# MODEL LABEL

(1) A label called “Model Label” is affixed in the location as indicated in (3) below.
When using this parts catalogue, please be sure to cross–reference the “model code – production code No.” in the catalogue with the “model code – production code No.” indicated on the Model Label affixed onto the product concerned.

(2) “Model Label” Indication

| | |
|---|---|
| a b<br>○ xxxx – xxx<br>● x c | a: Model Type Code<br>b: Production Code No.<br>c: Colouring Type |

| |
|---|
| ○ 4TW1–010<br>● A |

(3) Model Label Affixing Location

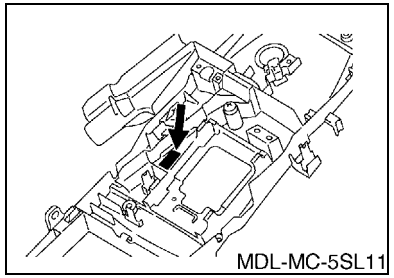


(4) Colouring Information

| Model Code | Colouring Type Code | Colour Code | Colour Name | Abbreviation |
|---|---|---|---|---|
| 5SLM | A | 0121 | VIVID RED COCKTAIL 1 | VRC1 |
| | B | 0564 | DEEP PURPLISH BLUE METALLIC C | DPBMC |
| | C | 0903 | BLACK METALLIC X | SMX |
| 5SLP | A | 0121 | VIVID RED COCKTAIL 1 | VRC1 |
| | B | 0564 | DEEP PURPLISH BLUE METALLIC C | DPBMC |
| | C | 0903 | BLACK METALLIC X | SMX |
| | | | | |
| | | | | |
| | | | | |
| | | | | |

(5) Model Code – Production Code Number of Model Listed in This Parts Catalogue

| Model Code | Production Code No. | Country (destination) |
|---|---|---|
| 5SLM | 010 | EUROPE 1 |
| | 020 | BELGIUM |
| | 050 | EUROPE 2 |
| | 060 | UNITED KINGDOM |
| | 070 | GREECE |
| | 080 | IRELAND |
| | | SOUTH AFRICA |
| | 100 | PORTUGAL |
| 5SLP | 010 | AUSTRALIA |
| | | |
| | | |
| | | |
| | | |
| | | |
| | | |
| | | |
| | | |
| | | |
| | | |
| | | |
| | | |
| | | |
| | | |
| | | |
| | | |

| Model Code | Production Code No. | Country (destination) |
|---|---|---|
| | | |
| | | |
| | | |
| | | |
| | | |
| | | |
| | | |
| | | |
| | | |
| | | |
| | | |
| | | |
| | | |
| | | |
| | | |
| | | |
| | | |

# CONTENTS

## ENGINE


CYLINDER ..... B2
CRANKSHAFT & PISTON ..... B3
VALVE ..... B4
CAMSHAFT & CHAIN ..... B6
WATER PUMP ..... B7
RADIATOR & HOSE ..... B8
OIL PUMP ..... B10
OIL CLEANER ..... B11
INTAKE ..... B12
INTAKE 2 ..... B14
AIR INDUCTION SYSTEM ..... C2
EXHAUST ..... C3
CRANKCASE ..... C4
CRANKCASE COVER 1 ..... C6
STARTER ..... C8
CLUTCH ..... C9
TRANSMISSION ..... C11
SHIFT CAM & FORK ..... C13
SHIFT SHAFT ..... C14


## CHASSIS


FRAME ..... C15
FENDER ..... D3
SIDE COVER ..... D5
REAR ARM ..... D6
REAR SUSPENSION ..... D8
STEERING ..... D9
FRONT FORK ..... D10
FUEL TANK ..... D12
SEAT ..... D14
FRONT WHEEL ..... D15
FRONT BRAKE CALIPER ..... E2
REAR WHEEL ..... E3
REAR BRAKE CALIPER ..... E5
STEERING HANDLE & CABLE ..... E6
FRONT MASTER CYLINDER ..... E7
STAND & FOOTREST ..... E9
REAR MASTER CYLINDER ..... E12
COWLING 1 ..... E14
COWLING 2 ..... F2
GENERATOR ..... F5
STARTING MOTOR ..... F6
FLASHER LIGHT ..... F7
METER ..... F8
HEADLIGHT ..... F9
TAILLIGHT ..... F10
HANDLE SWITCH & LEVER ..... F11
ELECTRICAL 1 ..... F12
ELECTRICAL 2 ..... F13


## INDEX


NUMERICAL INDEX ..... M1

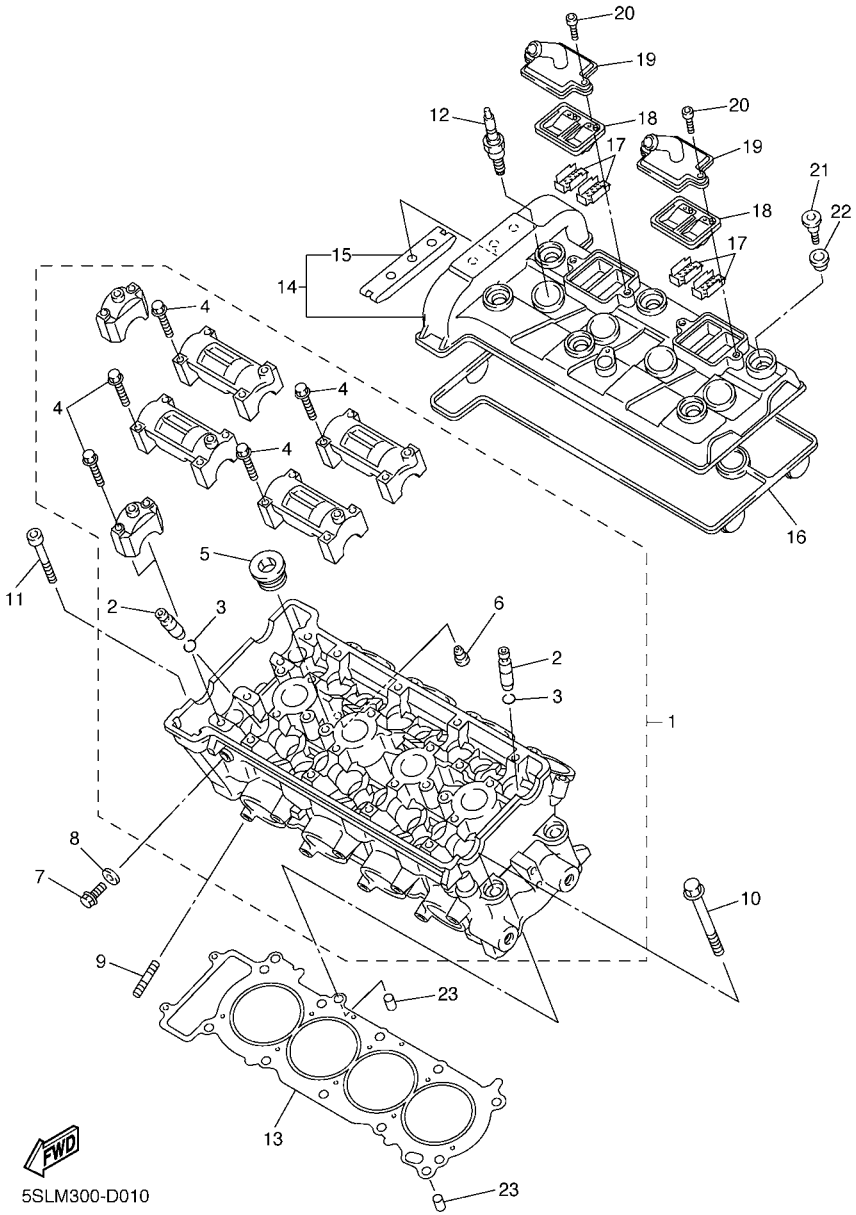


## FIG. 1 CYLINDER

| REF. NO. | PART NO. | DESCRIPTION | 5SLM | 5SLP | | | | REMARKS |
|---|---|---|---|---|---|---|---|---|
| 1 | 5SL–11101–10 | CYLINDER HEAD ASSY | 1 | 1 | | | | |
| 2 | 5EB–11133–10 | .GUIDE, VALVE 1 | 16 | 16 | | | | |
| 3 | 93440–10153 | .CIRCLIP | 16 | 16 | | | | |
| 4 | 90105–06027 | .BOLT, FLANGE | 20 | 20 | | | | |
| 5 | 90340–20090 | .PLUG, STRAIGHT SCREW | 3 | 3 | | | | |
| 6 | 11H–15138–00 | .NOZZLE 1 | 1 | 1 | | | | |
| 7 | 95027–08012 | BOLT, FLANGE | 1 | 1 | | | | |
| 8 | 90430–08119 | GASKET | 1 | 1 | | | | |
| 9 | 95617–08625 | BOLT, STUD | 8 | 8 | | | | |
| 10 | 90119–10003 | BOLT, WITH WASHER | 10 | 10 | | | | |
| 11 | 91317–06060 | BOLT | 2 | 2 | | | | |
| 12 | 94701–00402 | PLUG, SPARK (NGK CR10EK) | 4 | 4 | | | | |
| 13 | 5SL–11181–00 | GASKET, CYLINDER HEAD 1 | 1 | 1 | | | | |
| 14 | 5SL–11191–01 | COVER, CYLINDER HEAD 1 | 1 | 1 | | | | |
| 15 | 5BE–12241–00 | .GUIDE, STOPPER 2 | 1 | 1 | | | | |
| 16 | 5SL–11193–00 | GASKET, HEAD COVER 1 | 1 | 1 | | | | |
| 17 | 5SL–1482K–00 | PLATE | 4 | 4 | | | | |
| 18 | 5SL–14890–00 | REED VALVE ASSY | 2 | 2 | | | | |
| 19 | 5SL–14899–00 | CAP, CASE | 2 | 2 | | | | |
| 20 | 90110–06118 | BOLT, HEXAGON SOCKET HEAD | 4 | 4 | | | | |
| 21 | 90109–066F0 | BOLT | 6 | 6 | | | | |
| 22 | 4KG–1111G–00 | RUBBER, MOUNT 1 | 6 | 6 | | | | |
| 23 | 99530–10114 | PIN, DOWEL | 2 | 2 | | | | |

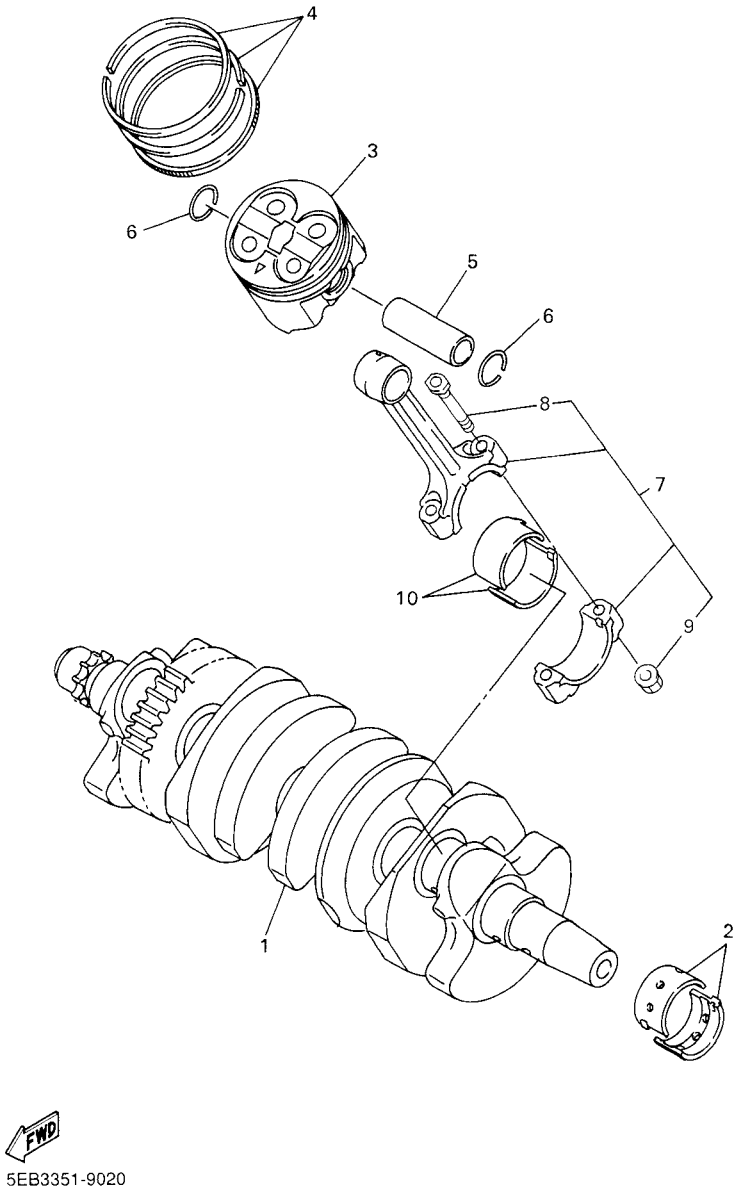


## FIG. 2 CRANKSHAFT & PISTON

| REF. NO. | PART NO. | DESCRIPTION | 5SLM | 5SLP | | | | REMARKS |
|---|---|---|---|---|---|---|---|---|
| 1 | 5SL–11411–00 | CRANKSHAFT | 1 | 1 | | | | |
| 2 | 5EB–11416–A0 | PLANE BEARING, CRANKSHAFT 1 | 10 | 10 | | | | UR WHITE |
| | 5EB–11416–00 | PLANE BEARING, CRANKSHAFT 1 | 10 | 10 | | | | UR BLUE |
| | 5EB–11416–10 | PLANE BEARING, CRANKSHAFT 1 | 10 | 10 | | | | UR BLACK |
| | 5EB–11416–20 | PLANE BEARING, CRANKSHAFT 1 | 10 | 10 | | | | UR BROWN |
| | 5EB–11416–30 | PLANE BEARING, CRANKSHAFT 1 | 10 | 10 | | | | UR GREEN |
| 3 | 5SL–11631–00 | PISTON (STD) | 4 | 4 | | | | |
| 4 | 5SL–11603–00 | PISTON RING SET (STD) | 4 | 4 | | | | |
| 5 | 5SL–11633–00 | PIN, PISTON | 4 | 4 | | | | |
| 6 | 93450–17129 | CIRCLIP | 8 | 8 | | | | |
| 7 | 5SL–11650–00 | CONNECTING ROD ASSY | 4 | 4 | | | | |
| 8 | 5SL–11654–00 | .BOLT, CONNECTING ROD | 2 | 2 | | | | |
| 9 | 90179–07652 | .NUT | 2 | 2 | | | | |
| 10 | 5SL–11656–00 | PLANE BEARING, CONNECTING ROD | 8 | 8 | | | | UR BLUE |
| | 5SL–11656–10 | PLANE BEARING, CONNECTING ROD | 8 | 8 | | | | UR BLACK |
| | 5SL–11656–20 | PLANE BEARING, CONNECTING ROD | 8 | 8 | | | | UR BROWN |
| | 5SL–11656–30 | PLANE BEARING, CONNECTING ROD | 8 | 8 | | | | UR GREEN |

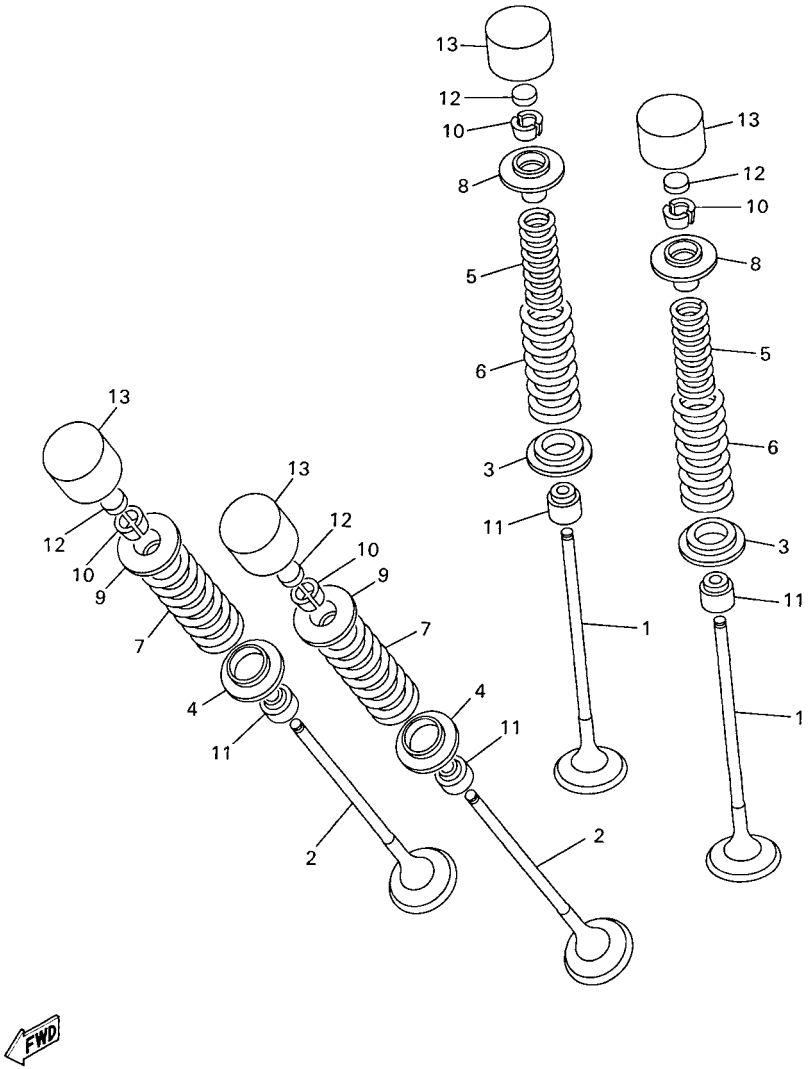


5EB3351-9030

## FIG. 3 VALVE

| REF. NO. | PART NO. | DESCRIPTION | 5SLM | 5SLP | | | | REMARKS |
|---|---|---|---|---|---|---|---|---|
| 1 | 5SL–12111–10 | VALVE, INTAKE | 8 | 8 | | | | |
| 2 | 5SL–12121–10 | VALVE, EXHAUST | 8 | 8 | | | | |
| 3 | 5SL–12116–00 | SEAT, VALVE SPRING | 8 | 8 | | | | |
| 4 | 5EB–12126–00 | SEAT, VALVE SPRING 2 | 8 | 8 | | | | |
| 5 | 5SL–12113–00 | SPRING, VALVE INNER | 8 | 8 | | | | |
| 6 | 5SL–12114–00 | SPRING, VALVE OUTER | 8 | 8 | | | | |
| 7 | 5EB–12124–01 | SPRING, VALVE OUTER | 8 | 8 | | | | |
| 8 | 5EB–12117–00 | RETAINER, VALVE SPRING | 8 | 8 | | | | |
| 9 | 5EB–12127–00 | RETAINER, VALVE SPRING | 8 | 8 | | | | |
| 10 | 1HX–12118–00 | COTTER, VALVE | 32 | 32 | | | | |
| 11 | 4TV–12119–00 | SEAL, VALVE STEM | 16 | 16 | | | | |
| 12 | 1HX–12168–00 | PAD, ADJUSTING 2 (1.20) | 16 | 16 | | | | UR |
| | 1HX–12168–20 | PAD, ADJUSTING 2 (1.25) | 16 | 16 | | | | UR |
| | 1HX–12168–40 | PAD, ADJUSTING 2 (1.30) | 16 | 16 | | | | UR |
| | 1HX–12168–60 | PAD, ADJUSTING 2 (1.35) | 16 | 16 | | | | UR |
| | 1HX–12168–80 | PAD, ADJUSTING 2 (1.40) | 16 | 16 | | | | UR |
| | 1HX–12168–A0 | PAD, ADJUSTING 2 (1.45) | 16 | 16 | | | | UR |
| | 1HX–12168–F0 | PAD, ADJUSTING 2 (1.50) | 16 | 16 | | | | UR |
| | 1HX–12168–H1 | PAD, ADJUSTING 2 (1.55) | 16 | 16 | | | | UR |
| | 1HX–12168–K1 | PAD, ADJUSTING 2 (1.60) | 16 | 16 | | | | UR |
| | 1HX–12168–M1 | PAD, ADJUSTING 2 (1.65) | 16 | 16 | | | | UR |
| | 1HX–12168–R1 | PAD, ADJUSTING 2 (1.70) | 16 | 16 | | | | UR |
| | 1HX–12168–U1 | PAD, ADJUSTING 2 (1.75) | 16 | 16 | | | | UR |
| | 1HX–12168–W1 | PAD, ADJUSTING 2 (1.80) | 16 | 16 | | | | UR |
| | 1HX–12168–Y1 | PAD, ADJUSTING 2 (1.85) | 16 | 16 | | | | UR |
| | 1HX–12169–11 | PAD, ADJUSTING 2 (1.90) | 16 | 16 | | | | UR |
| | 1HX–12169–31 | PAD, ADJUSTING 2 (1.95) | 16 | 16 | | | | UR |

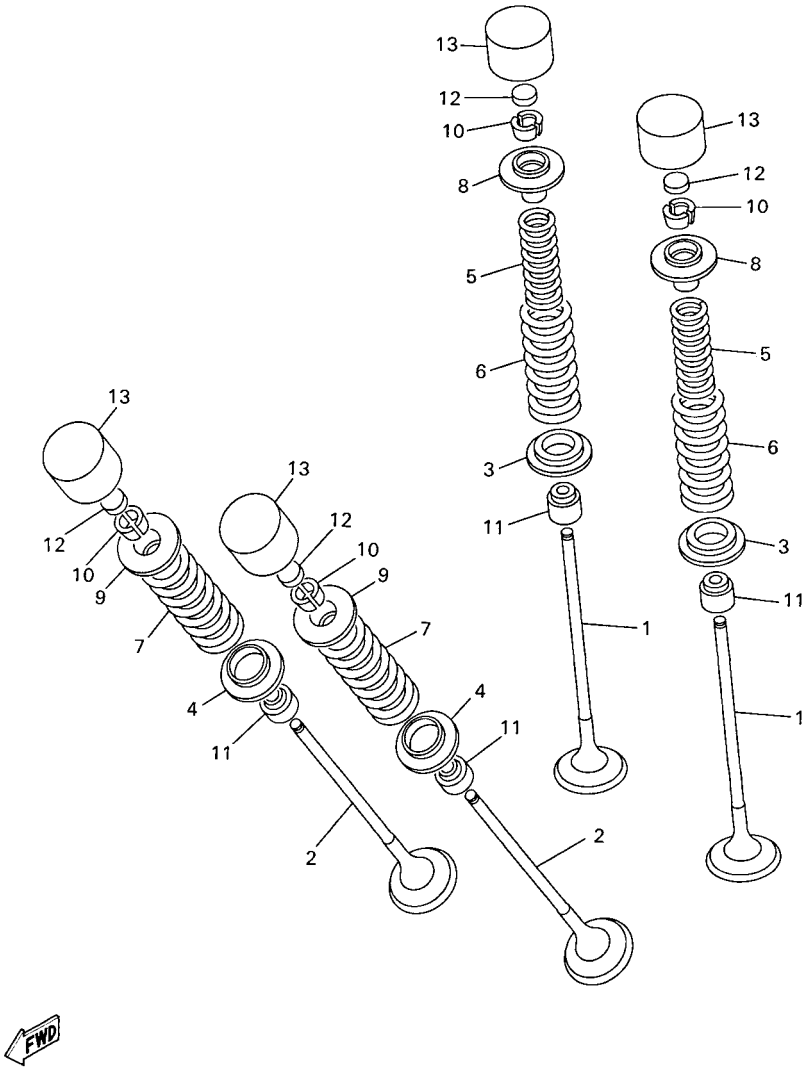


5EB3351-9030

## FIG. 3 VALVE

| REF. NO. | PART NO. | DESCRIPTION | 5SLM | 5SLP | | | | REMARKS |
|---|---|---|---|---|---|---|---|---|
| 12 | 1HX–12169–50 | PAD, ADJUSTING 2 (2.00) | 16 | 16 | | | | UR |
| | 1HX–12169–70 | PAD, ADJUSTING 2 (2.05) | 16 | 16 | | | | UR |
| | 1HX–12169–90 | PAD, ADJUSTING 2 (2.10) | 16 | 16 | | | | UR |
| | 1HX–12169–E0 | PAD, ADJUSTING 2 (2.15) | 16 | 16 | | | | UR |
| | 1HX–12169–G0 | PAD, ADJUSTING 2 (2.20) | 16 | 16 | | | | UR |
| | 1HX–12169–J0 | PAD, ADJUSTING 2 (2.25) | 16 | 16 | | | | UR |
| | 1HX–12169–L0 | PAD, ADJUSTING 2 (2.30) | 16 | 16 | | | | UR |
| | 1HX–12169–N0 | PAD, ADJUSTING 2 (2.35) | 16 | 16 | | | | UR |
| | 1HX–12169–T0 | PAD, ADJUSTING 2 (2.40) | 16 | 16 | | | | UR |
| 13 | 5EB–12153–20 | LIFTER, VALVE | 16 | 16 | | | | UR BLUE |
| | 5EB–12153–30 | LIFTER, VALVE | 16 | 16 | | | | UR RED |
| | 5EB–12153–09 | LIFTER, VALVE (O/S) | 16 | 16 | | | | AP GREEN |

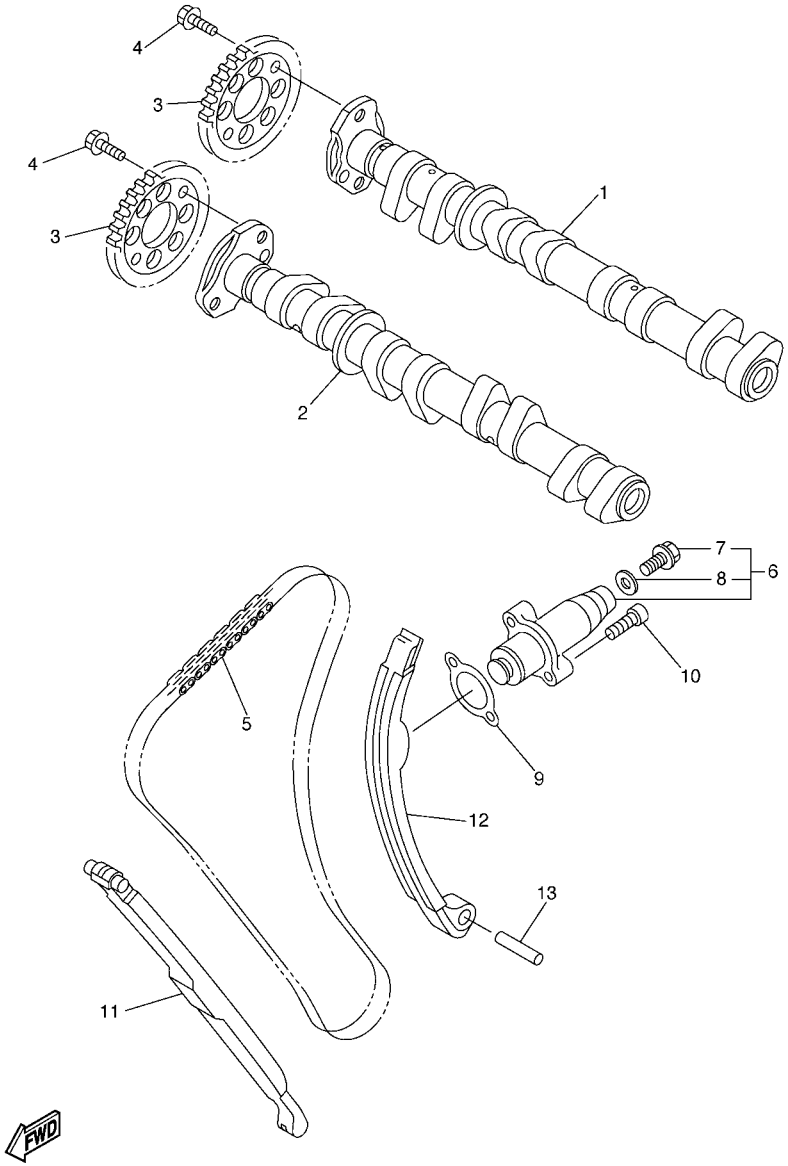


5SLM300-D040

## FIG. 4 CAMSHAFT & CHAIN

| REF. NO. | PART NO. | DESCRIPTION | 5SLM | 5SLP | | | | REMARKS |
|---|---|---|---|---|---|---|---|---|
| 1 | 5SL–12170–00 | CAMSHAFT ASSY 1 | 1 | 1 | | | | |
| 2 | 5SL–12180–00 | CAMSHAFT ASSY 2 | 1 | 1 | | | | |
| 3 | 5EB–12176–00 | SPROCKET, CAM CHAIN | 2 | 2 | | | | |
| 4 | 90105–07004 | BOLT, FLANGE | 4 | 4 | | | | |
| 5 | 94591–49120 | CHAIN | 1 | 1 | | | | |
| 6 | 5SL–12210–10 | TENSIONER ASSY, CAM CHAIN | 1 | 1 | | | | |
| 7 | 5EL–12228–00 | .BOLT | 1 | 1 | | | | |
| 8 | 5SL–12214–00 | .GASKET | 1 | 1 | | | | |
| 9 | 4FM–12213–00 | GASKET, TENSIONER CASE | 1 | 1 | | | | |
| 10 | 91317–06025 | BOLT | 2 | 2 | | | | |
| 11 | 5EB–12251–00 | DAMPER, CHAIN 1 | 1 | 1 | | | | |
| 12 | 5EB–12252–10 | DAMPER, CHAIN 2 | 1 | 1 | | | | |
| 13 | 93607–44190 | PIN, DOWEL | 1 | 1 | | | | |

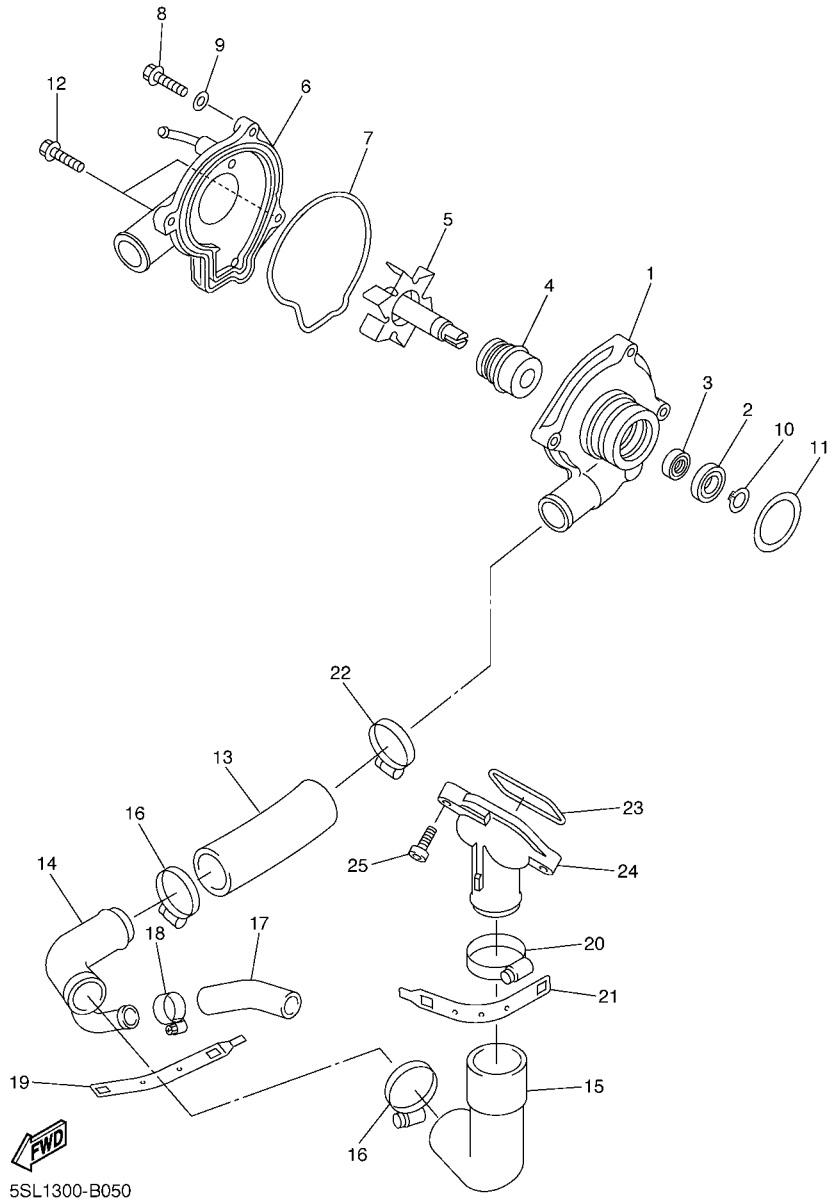


## FIG. 5 WATER PUMP

| REF. NO. | PART NO. | DESCRIPTION | 5SLM | 5SLP | | | | REMARKS |
|---|---|---|---|---|---|---|---|---|
| 1 | 5EB–12421–00 | HOUSING, WATER PUMP | 1 | 1 | | | | |
| 2 | 93306–00106 | BEARING | 1 | 1 | | | | |
| 3 | 93101–12173 | OIL SEAL | 1 | 1 | | | | |
| 4 | 11H–12438–10 | SEAL, MECHANICAL | 1 | 1 | | | | |
| 5 | 5EB–12450–00 | IMPELLER SHAFT ASSY | 1 | 1 | | | | |
| 6 | 5SL–12422–00 | COVER, HOUSING | 1 | 1 | | | | |
| 7 | 5EB–12439–00 | O-RING | 1 | 1 | | | | |
| 8 | 95024–06020 | BOLT, FLANGE | 2 | 2 | | | | |
| 9 | 90430–06014 | GASKET | 1 | 1 | | | | |
| 10 | 99009–12400 | CIRCLIP | 1 | 1 | | | | |
| 11 | 93210–33133 | O-RING | 1 | 1 | | | | |
| 12 | 90110–06149 | BOLT, HEXAGON SOCKET HEAD | 2 | 2 | | | | |
| 13 | 4NK–12579–00 | HOSE 4 | 1 | 1 | | | | |
| 14 | 5EB–12581–00 | JOINT, HOSE 1 | 1 | 1 | | | | |
| 15 | 5EB–12577–01 | HOSE 2 | 1 | 1 | | | | |
| 16 | 90450–35001 | HOSE CLAMP ASSY | 2 | 2 | | | | |
| 17 | 5SL–12588–01 | HOSE 5 | 1 | 1 | | | | |
| 18 | 90450–22017 | HOSE CLAMP ASSY | 1 | 1 | | | | |
| 19 | 5GV–1246E–00 | COVER 2 | 1 | 1 | | | | |
| 20 | 90450–38040 | HOSE CLAMP ASSY | 1 | 1 | | | | |
| 21 | 5GV–1246A–00 | COVER 1 | 1 | 1 | | | | |
| 22 | 90450–32001 | HOSE CLAMP ASSY | 1 | 1 | | | | |
| 23 | 93210–47675 | O-RING | 1 | 1 | | | | |
| 24 | 5EB–12469–00 | JOINT 1 | 1 | 1 | | | | |
| 25 | 90105–06053 | BOLT, FLANGE | 2 | 2 | | | | |

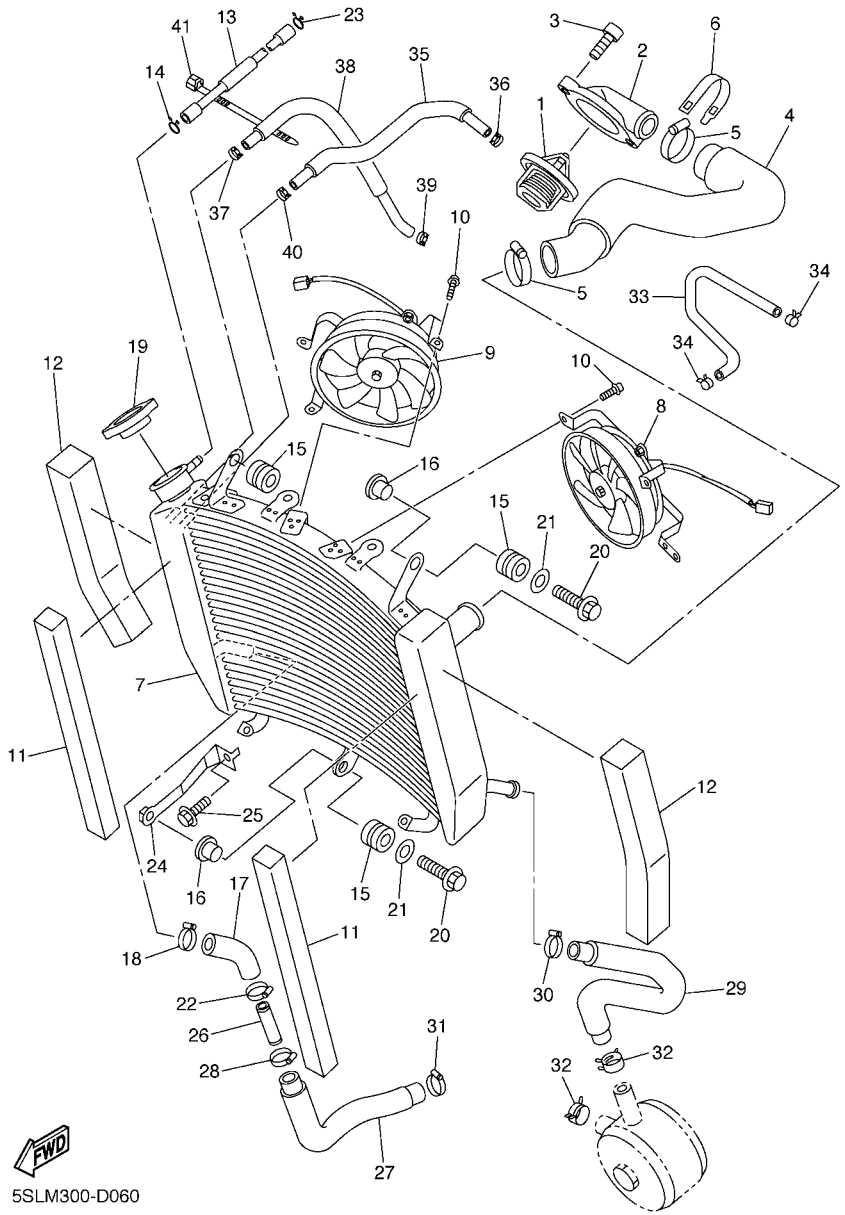


## FIG. 6 RADIATOR & HOSE

| REF. NO. | PART NO. | DESCRIPTION | 5SLM | 5SLP | | | | REMARKS |
|---|---|---|---|---|---|---|---|---|
| 1 | 5SL–12410–00 | THERMOSTAT ASSY | 1 | 1 | | | | |
| 2 | 5EB–12413–00 | COVER, THERMOSTAT | 1 | 1 | | | | |
| 3 | 91317–06020 | BOLT | 2 | 2 | | | | |
| 4 | 5SL–12578–00 | HOSE 3 | 1 | 1 | | | | |
| 5 | 90450–35001 | HOSE CLAMP ASSY | 2 | 2 | | | | |
| 6 | 5GV–1246E–00 | COVER 2 | 1 | 1 | | | | |
| 7 | 5SL–12461–10 | RADIATOR ASSY | 1 | 1 | | | | |
| 8 | 5SL–12405–10 | BLOWER ASSY | 1 | 1 | | | | |
| 9 | 5SL–12405–20 | BLOWER ASSY | 1 | 1 | | | | |
| 10 | 5GJ–12675–00 | BOLT, BLOWER HOLDING | 6 | 6 | | | | |
| 11 | 5SL–12659–00 | DAMPER, AIR SHROUD 2 | 2 | 2 | | | | |
| 12 | 5EB–12668–00 | DAMPER, AIR SHROUD 3 | 2 | 2 | | | | |
| 13 | 90445–08016 | HOSE | 1 | 1 | | | | |
| 14 | 90467–08075 | CLIP | 1 | 1 | | | | |
| 15 | 90480–15363 | GROMMET | 3 | 3 | | | | |
| 16 | 90387–07391 | COLLAR | 2 | 2 | | | | |
| 17 | 5SL–12579–10 | HOSE 4 | 1 | 1 | | | | |
| 18 | 90450–35001 | HOSE CLAMP ASSY | 1 | 1 | | | | |
| 19 | 5SL–12462–00 | CAP, RADIATOR | 1 | 1 | | | | |
| 20 | 90105–06040 | BOLT, FLANGE | 2 | 2 | | | | |
| 21 | 90201–06071 | WASHER, PLATE | 2 | 2 | | | | |
| 22 | 90450–35001 | HOSE CLAMP ASSY | 1 | 1 | | | | |
| 23 | 90467–08075 | CLIP | 1 | 1 | | | | |
| 24 | 5SL–1244E–10 | BRACKET 1 | 1 | 1 | | | | |
| 25 | 95827–06012 | BOLT, FLANGE | 1 | 1 | | | | |
| 26 | 5SL–12582–10 | JOINT, HOSE 2 | 1 | 1 | | | | |
| 27 | 5SL–12551–10 | HOSE 7 | 1 | 1 | | | | |

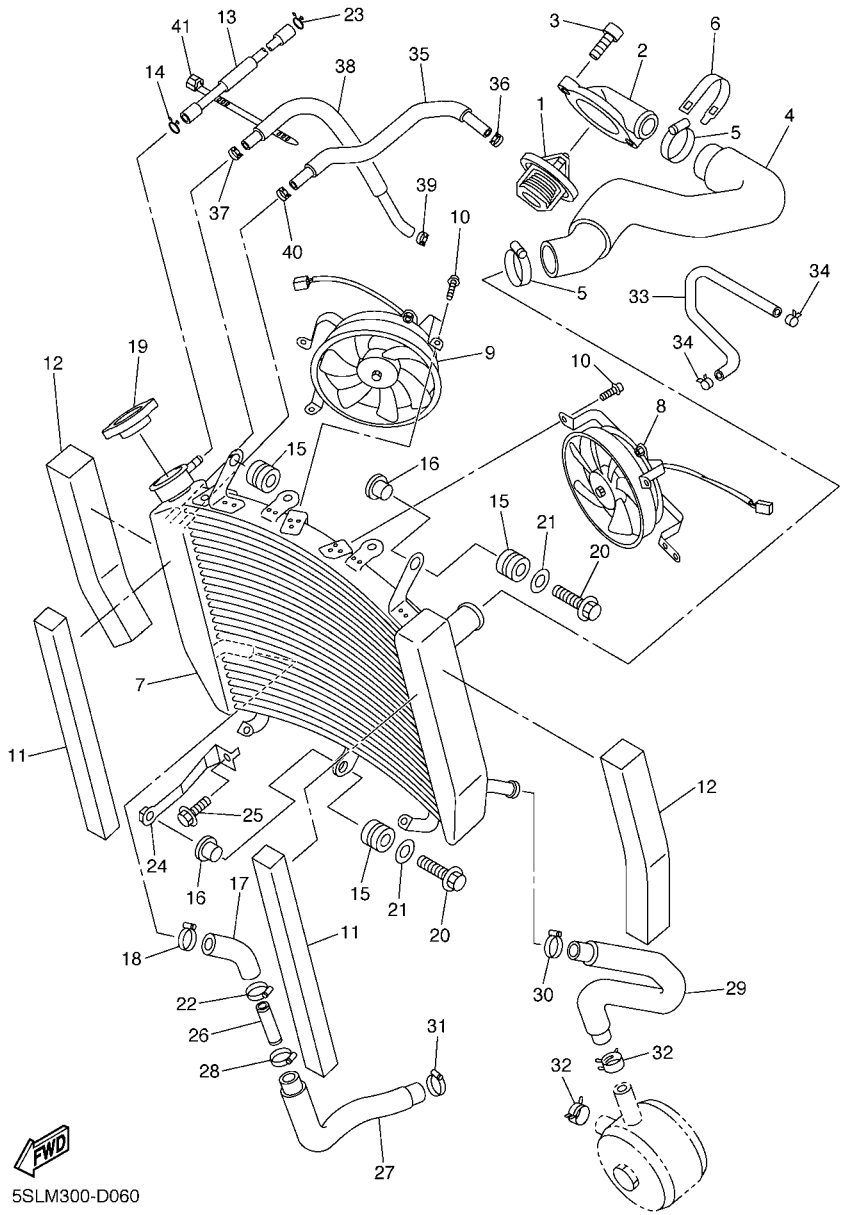


## FIG. 6 RADIATOR & HOSE

| REF. NO. | PART NO. | DESCRIPTION | 5SLM | 5SLP | | | | REMARKS |
|---|---|---|---|---|---|---|---|---|
| 28 | 90450–35001 | HOSE CLAMP ASSY | 1 | 1 | | | | |
| 29 | 5SL–12589–01 | HOSE 6 | 1 | 1 | | | | |
| 30 | 90450–22017 | HOSE CLAMP ASSY | 1 | 1 | | | | |
| 31 | 90450–32001 | HOSE CLAMP ASSY | 1 | 1 | | | | |
| 32 | 90467–200A0 | CLIP | 2 | 2 | | | | |
| 33 | 5SL–1243A–00 | HOSE 1 | 1 | 1 | | | | |
| 34 | 90467–11090 | CLIP | 2 | 2 | | | | |
| 35 | 5SL–1243E–00 | HOSE 2 | 1 | 1 | | | | |
| 36 | 90467–11090 | CLIP | 1 | 1 | | | | |
| 37 | 90467–11090 | CLIP | 1 | 1 | | | | |
| 38 | 5SL–1244G–00 | HOSE, 4 | 1 | 1 | | | | |
| 39 | 90467–11090 | CLIP | 1 | 1 | | | | |
| 40 | 90467–11090 | CLIP | 1 | 1 | | | | |
| 41 | 90464–28002 | CLAMP | 1 | 1 | | | | |

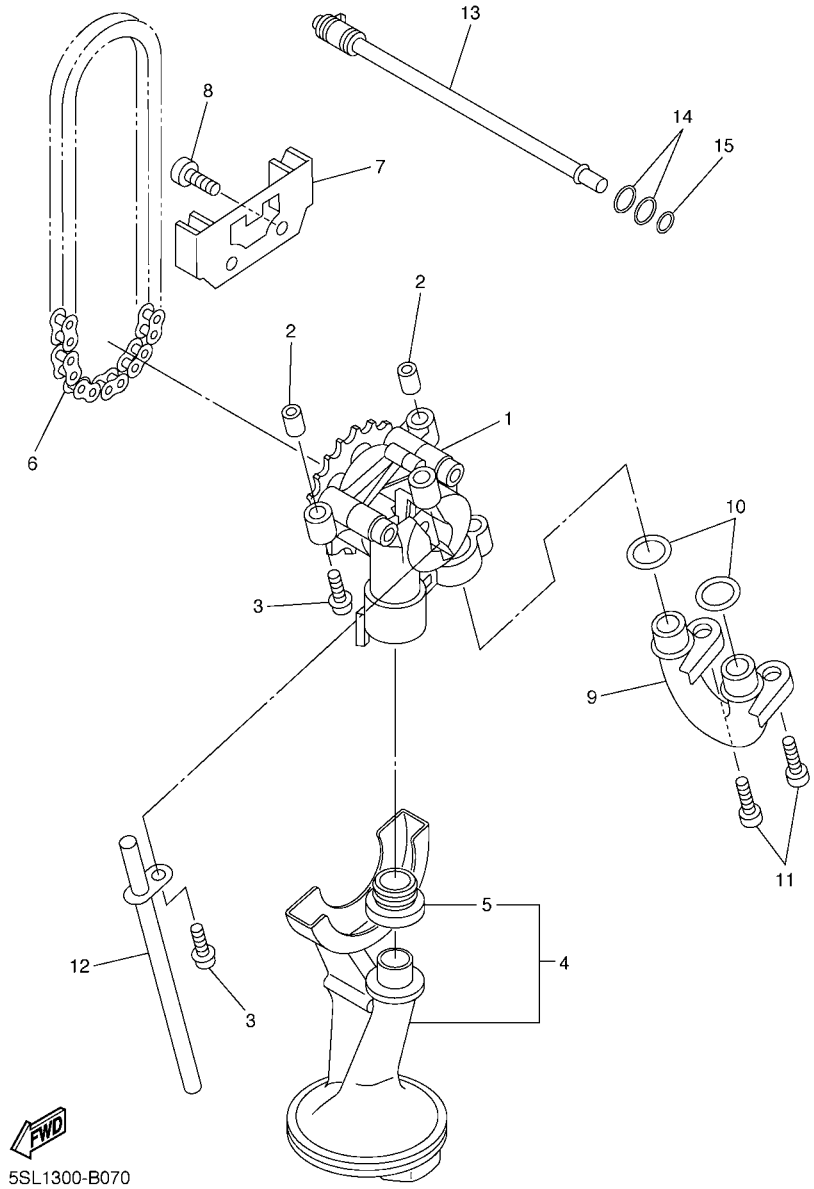


## FIG. 7 OIL PUMP

| REF. NO. | PART NO. | DESCRIPTION | 5SLM | 5SLP | | | | REMARKS |
|---|---|---|---|---|---|---|---|---|
| 1 | 5MT–13300–00 | OIL PUMP ASSY | 1 | 1 | | | | |
| 2 | 91808–17032 | PIN, DOWEL | 2 | 2 | | | | |
| 3 | 90109–06031 | BOLT | 3 | 3 | | | | |
| 4 | 5SL–13410–00 | STRAINER HOUSING ASSY | 1 | 1 | | | | |
| 5 | 5EB–13415–00 | .SEAL, OIL STRAINER | 1 | 1 | | | | |
| 6 | 94580–25080 | CHAIN | 1 | 1 | | | | |
| 7 | 5EB–13898–00 | HOLDER | 1 | 1 | | | | |
| 8 | 90110–06041 | BOLT, HEXAGON SOCKET HEAD | 2 | 2 | | | | |
| 9 | 5JW–13416–00 | PIPE, OIL 1 | 1 | 1 | | | | |
| 10 | 93210–14003 | O-RING | 2 | 2 | | | | |
| 11 | 90110–06041 | BOLT, HEXAGON SOCKET HEAD | 2 | 2 | | | | |
| 12 | 5EB–13161–00 | PIPE, DELIVERY 1 | 1 | 1 | | | | |
| 13 | 5EB–1316E–00 | PIPE, DELIVERY 5 | 1 | 1 | | | | |
| 14 | 93210–09165 | O-RING | 2 | 2 | | | | |
| 15 | 93210–06667 | O-RING | 1 | 1 | | | | |

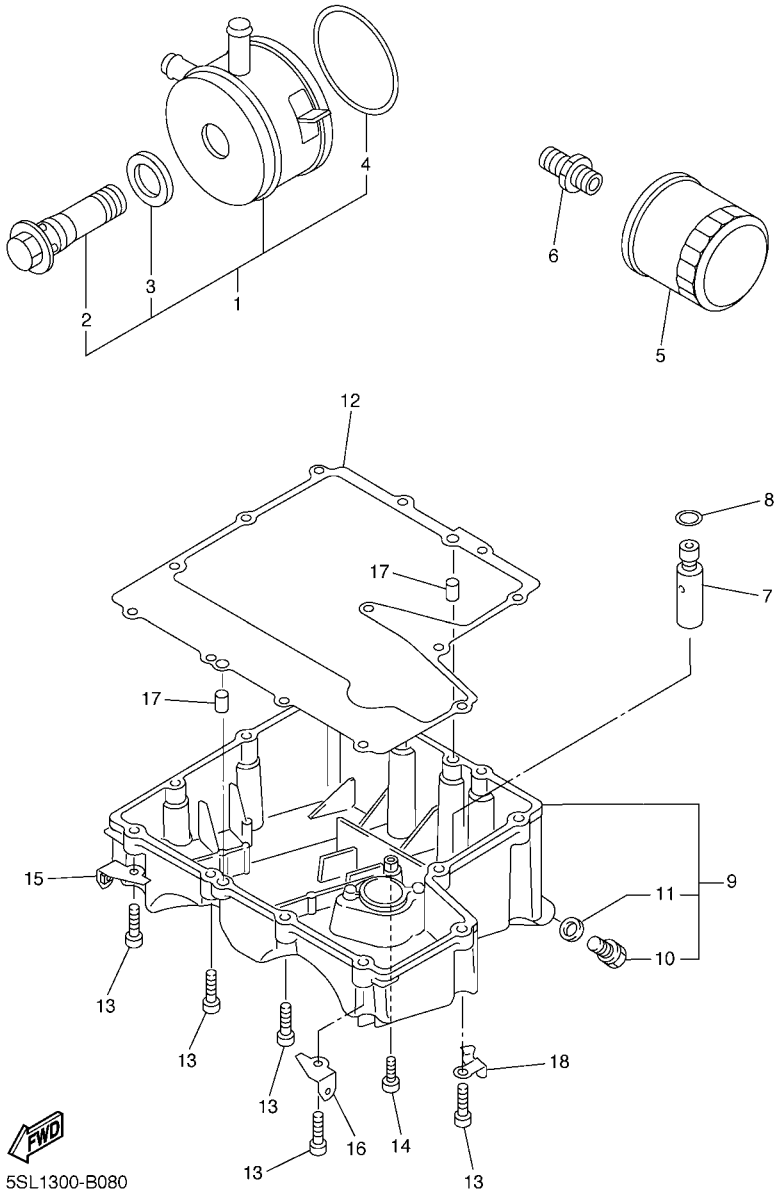


## FIG. 8 OIL CLEANER

| REF. NO. | PART NO. | DESCRIPTION | 5SLM | 5SLP | | | | REMARKS |
|---|---|---|---|---|---|---|---|---|
| 1 | 5EB–13470–00 | OIL COOLER ASSY | 1 | 1 | | | | |
| 2 | 5EB–12822–00 | .BOLT, UNION | 1 | 1 | | | | |
| 3 | 5EB–13475–00 | .GASKET | 1 | 1 | | | | |
| 4 | 5JW–13473–00 | .O-RING | 1 | 1 | | | | |
| 5 | 5GH–13440–00 | ELEMENT ASSY, OIL CLEANER | 1 | 1 | | | | |
| 6 | 90401–20145 | BOLT, UNION | 1 | 1 | | | | |
| 7 | 3KS–13490–00 | RELIEF VALVE ASSY | 1 | 1 | | | | |
| 8 | 93210–15566 | O-RING | 1 | 1 | | | | |
| 9 | 5SL–13417–00 | COVER, STRAINER | 1 | 1 | | | | |
| 10 | 90340–14132 | .PLUG, STRAIGHT SCREW | 1 | 1 | | | | |
| 11 | 214–11198–01 | .GASKET | 1 | 1 | | | | |
| 12 | 5SL–13414–00 | GASKET, STRAINER COVER | 1 | 1 | | | | |
| 13 | 91317–06025 | BOLT | 12 | 12 | | | | |
| 14 | 90110–06020 | BOLT, HEXAGON SOCKET HEAD | 1 | 1 | | | | |
| 15 | 5EB–2836E–00 | BRACKET 2 | 1 | 1 | | | | |
| 16 | 5EB–2836A–00 | BRACKET 1 | 1 | 1 | | | | |
| 17 | 99530–08012 | PIN, DOWEL | 2 | 2 | | | | |
| 18 | 90465–10030 | CLAMP | 1 | 1 | | | | |

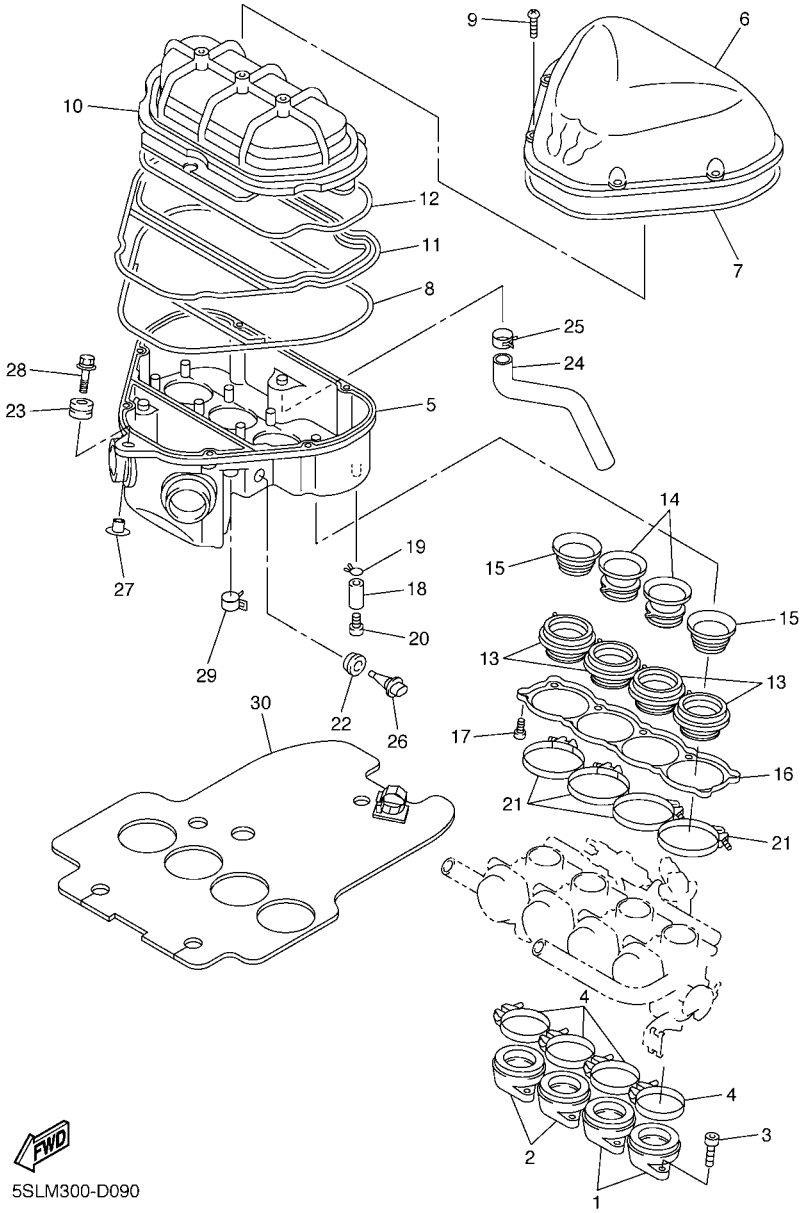


## FIG. 9 INTAKE

| REF. NO. | PART NO. | DESCRIPTION | 5SLM | 5SLP | | | | REMARKS |
|---|---|---|---|---|---|---|---|---|
| 1 | 5SL–13586–10 | JOINT, CARBURETOR 1 | 2 | 2 | | | | |
| 2 | 5SL–13596–10 | JOINT, CARBURETOR 2 | 2 | 2 | | | | |
| 3 | 91317–06020 | BOLT | 8 | 8 | | | | |
| 4 | 90450–63003 | HOSE CLAMP ASSY | 4 | 4 | | | | |
| 5 | 5SL–14411–00 | CASE, AIR CLEANER 1 | 1 | 1 | | | | |
| 6 | 5SL–14421–00 | CASE, AIR CLEANER 2 | 1 | 1 | | | | |
| 7 | 5EB–14452–00 | SEAL | 1 | 1 | | | | |
| 8 | 5EB–14462–00 | SEAL | 1 | 1 | | | | |
| 9 | 98507–05025 | SCREW, PAN HEAD | 6 | 6 | | | | |
| 10 | 5SL–14450–00 | ELEMENT ASSY, AIR CLEANER | 1 | 1 | | | | |
| 11 | 5EB–1441F–01 | PARTITION, AIR CLEANER CASE | 1 | 1 | | | | |
| 12 | 5EB–14457–00 | SEAL | 1 | 1 | | | | |
| 13 | 5SL–14453–10 | JOINT, AIR CLEANER 1 | 4 | 4 | | | | |
| 14 | 5SL–14469–10 | FUNNEL, AIR | 2 | 2 | | | | |
| 15 | 5SL–14479–10 | FUNNEL | 2 | 2 | | | | |
| 16 | 5SL–14477–00 | PLATE | 1 | 1 | | | | |
| 17 | 97707–50120 | SCREW, TAPPING | 10 | 10 | | | | |
| 18 | 90445–11795 | HOSE (L30) | 1 | 1 | | | | |
| 19 | 90467–10041 | CLIP | 1 | 1 | | | | |
| 20 | 90338–08174 | PLUG | 1 | 1 | | | | |
| 21 | 90450–53002 | HOSE CLAMP ASSY | 4 | 4 | | | | |
| 22 | 5CA–14435–00 | GROMMET | 1 | 1 | | | | |
| 23 | 90480–12314 | GROMMET | 1 | 1 | | | | |
| 24 | 5SL–15373–00 | PIPE, BREATHER | 1 | 1 | | | | |
| 25 | 90467–15054 | CLIP | 1 | 1 | | | | |
| 26 | 5CA–85886–00 | SENSOR, AIR TEMPRATURE | 1 | 1 | | | | |
| 27 | 90387–065J6 | COLLAR | 1 | 1 | | | | |

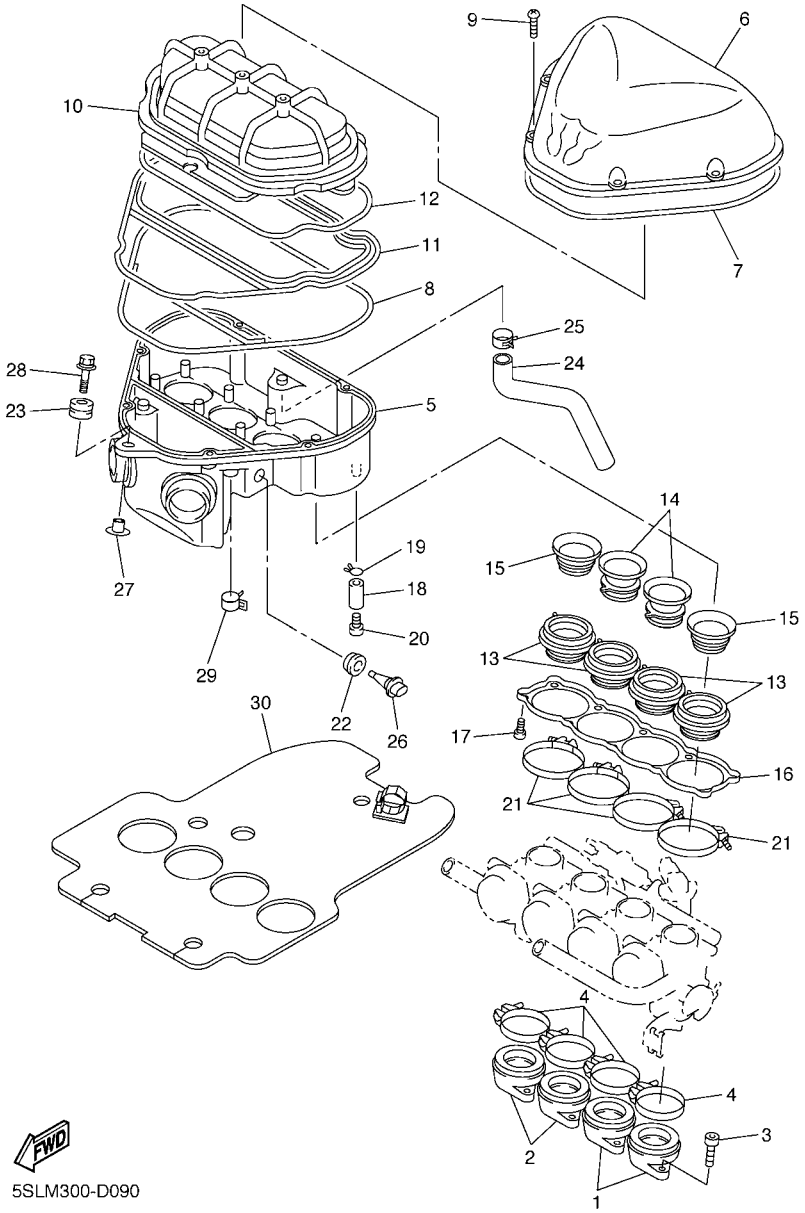


## FIG. 9 INTAKE

| REF. NO. | PART NO. | DESCRIPTION | 5SLM | 5SLP | | | | REMARKS |
|---|---|---|---|---|---|---|---|---|
| 28 | 90119–06172 | BOLT, WITH WASHER | 1 | 1 | | | | |
| 29 | 90467–17128 | CLIP | 2 | 2 | | | | |
| 30 | 5SL–12682–10 | PROTECTOR, HEAT | 1 | 1 | | | | |

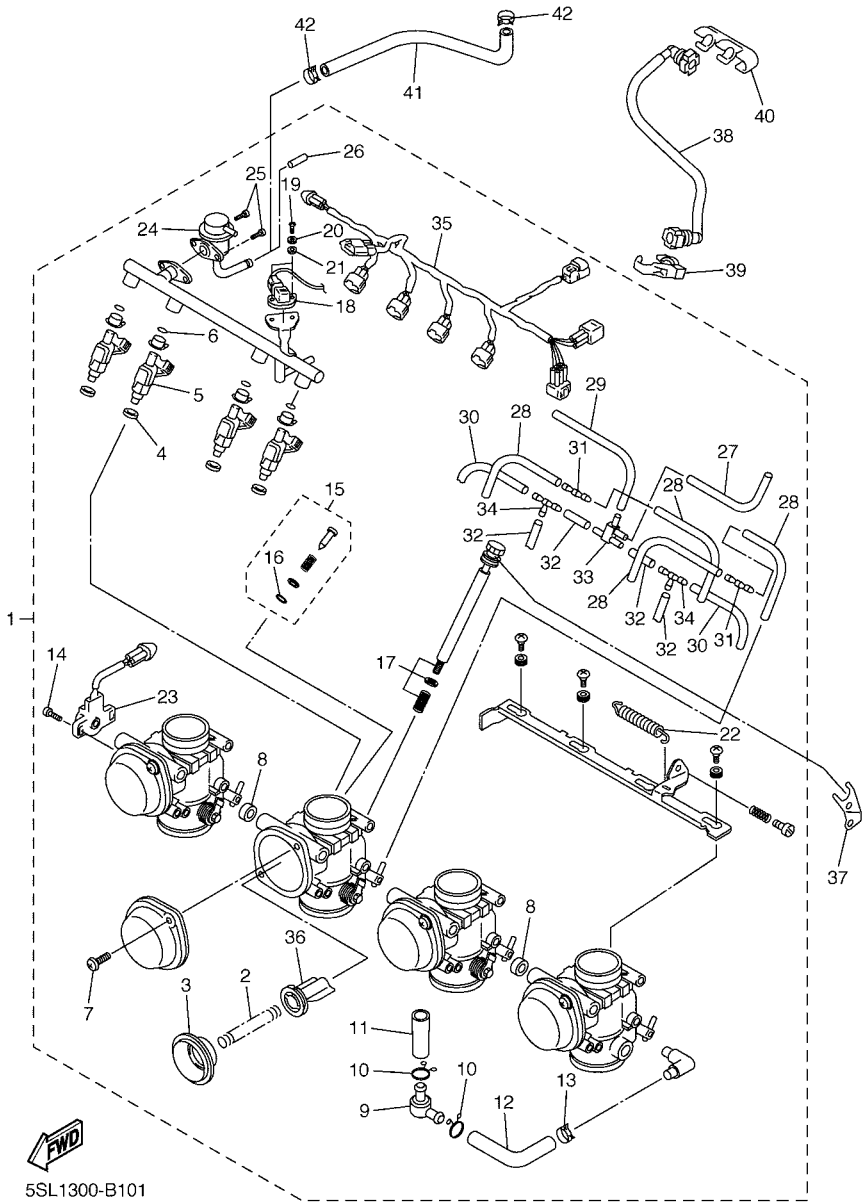


## FIG. 10 INTAKE 2

| REF. NO. | PART NO. | DESCRIPTION | 5SLM | 5SLP | | | | REMARKS |
|---|---|---|---|---|---|---|---|---|
| 1 | 5SL–13750–30 | THROTTLE BODY ASSY | 1 | 1 | | | | |
| 2 | 4SV–14933–00 | .SPRING, DIAPHRAGM | 4 | 4 | | | | |
| 3 | 5SL–24411–00 | .DIAPHRAGM | 4 | 4 | | | | |
| 4 | 5SL–13556–00 | .GASKET | 4 | 4 | | | | |
| 5 | 5SL–13761–00 | .INJECTOR ASSY | 4 | 4 | | | | |
| 6 | 5FL–14147–00 | .O-RING | 4 | 4 | | | | |
| 7 | 4KM–14216–00 | .SCREW | 8 | 8 | | | | |
| 8 | 5SL–14987–00 | .HOSE | 2 | 2 | | | | |
| 9 | 3LN–24515–00 | .NET, FILTER 2 | 2 | 2 | | | | |
| 10 | 90467–15012 | .CLIP | 4 | 4 | | | | |
| 11 | 5SL–14148–00 | .PIPE | 2 | 2 | | | | |
| 12 | 5SL–14348–00 | .PIPE 1 | 2 | 2 | | | | |
| 13 | 90467–15001 | .CLIP | 2 | 2 | | | | |
| 14 | 8CC–14216–10 | .SCREW | 2 | 2 | | | | |
| 15 | 5JW–14104–00 | .AIR SCREW SET | 4 | 4 | | | | |
| 16 | 3H1–14147–00 | ..O-RING | 1 | 1 | | | | |
| 17 | 5SL–14103–00 | .THROTTLE SCREW SET | 1 | 1 | | | | |
| 18 | 5JW–82380–00 | .SENSOR, PRESSURE | 1 | 1 | | | | |
| 19 | 98507–05016 | .SCREW, PAN HEAD | 2 | 2 | | | | |
| 20 | 92907–05100 | .WASHER, SPRING | 2 | 2 | | | | |
| 21 | 92907–05600 | .WASHER, PLATE | 2 | 2 | | | | |
| 22 | 5JW–14589–00 | .SPRING | 1 | 1 | | | | |
| 23 | 5SL–85885–00 | .THROTTLE SENSOR ASSY | 1 | 1 | | | | |
| 24 | 5SL–13906–10 | .REGULATOR, PRESSURE | 1 | 1 | | | | |
| 25 | 98507–05008 | .SCREW, PAN HEAD | 2 | 2 | | | | |
| 26 | 5JW–14118–00 | .CAP | 1 | 1 | | | | |
| 27 | 5SL–14349–00 | .PIPE | 1 | 1 | | | | |

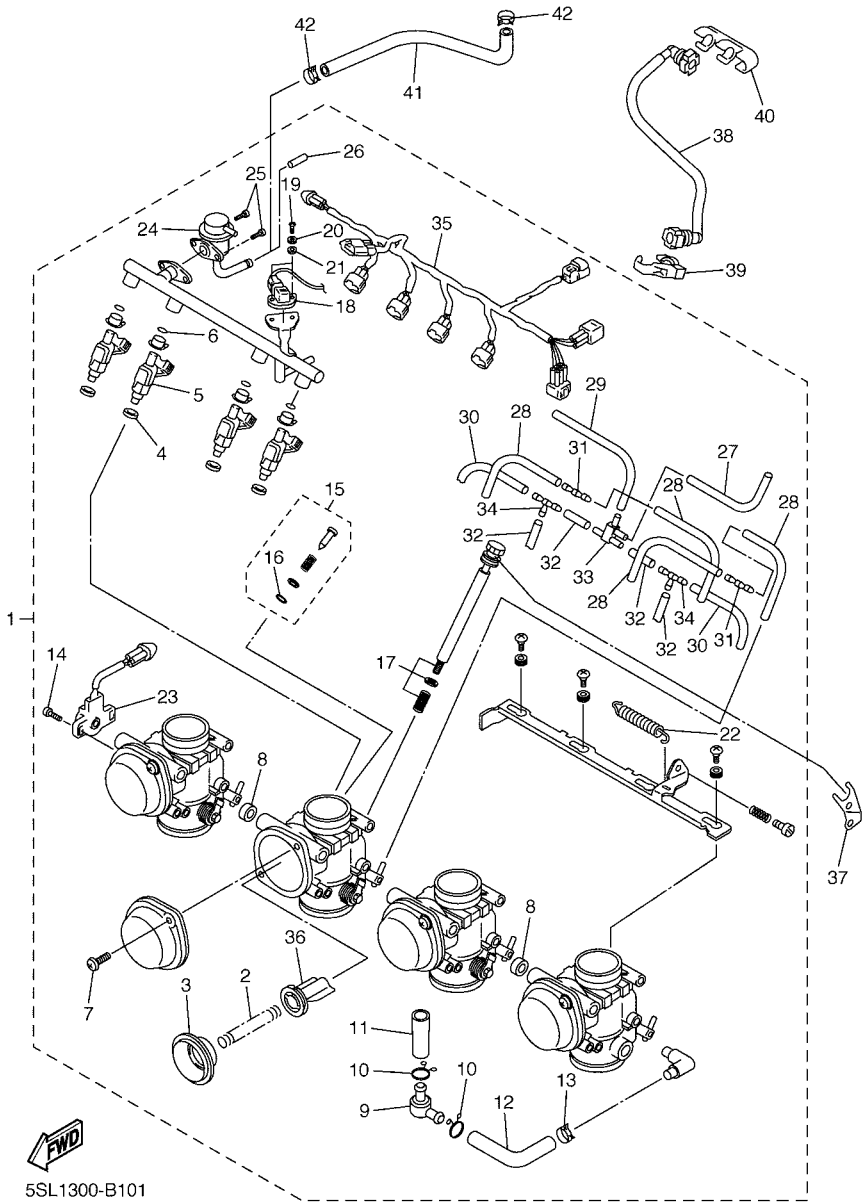


## FIG. 10 INTAKE 2

| REF. NO. | PART NO. | DESCRIPTION | 5SLM | 5SLP | | | | REMARKS |
|---|---|---|---|---|---|---|---|---|
| 28 | 5PW–14396–00 | .PIPE | 4 | 4 | | | | |
| 29 | 5PW–14349–00 | .PIPE | 1 | 1 | | | | |
| 30 | 68V–13533–00 | .HOSE, VACUUM SENSING 4 | 2 | 2 | | | | |
| 31 | 5PW–14251–00 | .NIPPLE | 2 | 2 | | | | |
| 32 | 5FL–14348–10 | .PIPE 1 | 4 | 4 | | | | |
| 33 | 5PW–1410F–00 | .CONNECTOR | 1 | 1 | | | | |
| 34 | 68V–24376–00 | .PIPE, JOINT 1 | 2 | 2 | | | | |
| 35 | 5SL–82386–00 | .EXTENSION, WIRE HARNESS | 1 | 1 | | | | |
| 36 | 5PW–14112–00 | .VALVE, THROTTLE 1 | 4 | 4 | | | | |
| 37 | 5SL–14413–00 | STAY | 1 | 1 | | | | |
| 38 | 5SL–13971–00 | PIPE, FUEL 1 | 1 | 1 | | | | |
| 39 | 90464–16005 | CLAMP | 1 | 1 | | | | |
| 40 | 90464–16005 | CLAMP | 1 | 1 | | | | |
| 41 | 5SL–13972–00 | PIPE, FUEL 2 | 1 | 1 | | | | |
| 42 | 90467–12003 | CLIP | 2 | 2 | | | | |

## FIG. 11 AIR INDUCTION SYSTEM

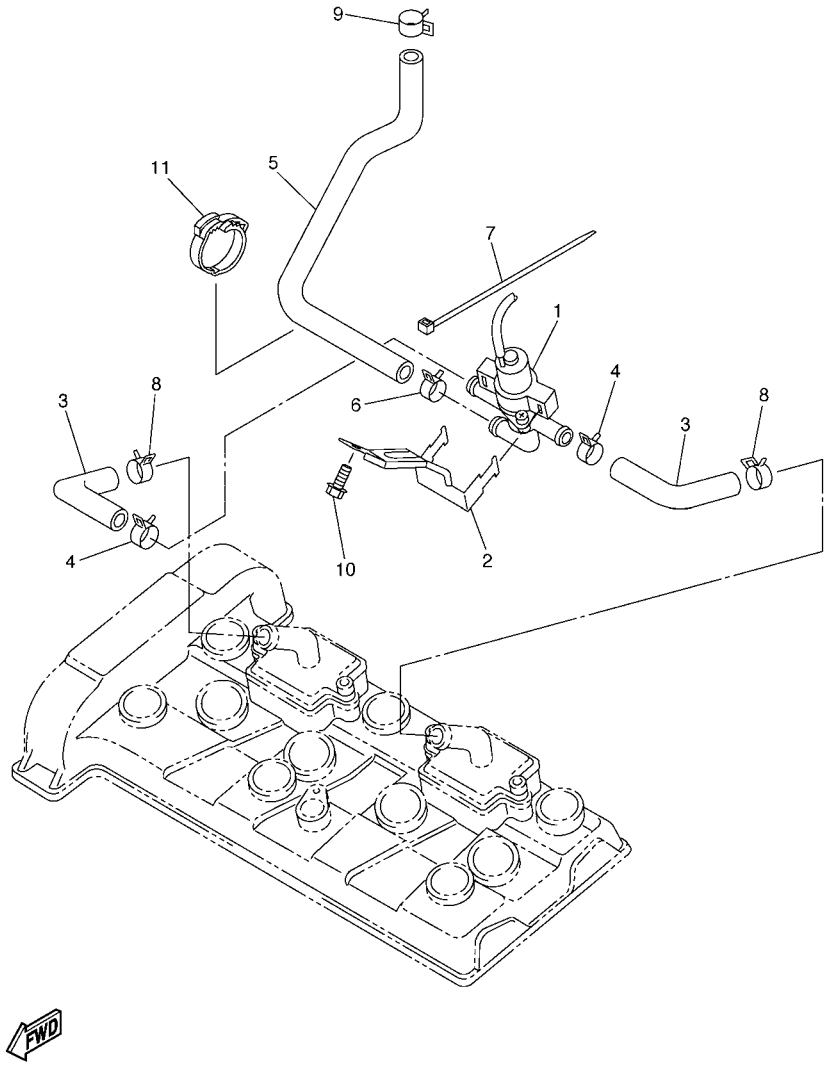


5SLM300-D110

| REF. NO. | PART NO. | DESCRIPTION | 5SLM | 5SLP | | | | REMARKS |
|---|---|---|---|---|---|---|---|---|
| 1 | 5SL–14840–00 | AIR CUT VALVE ASS'Y | 1 | 1 | | | | |
| 2 | 5SL–14834–10 | STAY | 1 | 1 | | | | |
| 3 | 5SL–14881–00 | HOSE, BEND 1 | 2 | 2 | | | | |
| 4 | 90467–18172 | CLIP | 2 | 2 | | | | |
| 5 | 5SL–14882–00 | HOSE, BEND 2 | 1 | 1 | | | | |
| 6 | 90467–18172 | CLIP | 1 | 1 | | | | |
| 7 | 5Y9–12491–00 | CLAMP 1 | 1 | 1 | | | | |
| 8 | 90467–180A0 | CLIP | 2 | 2 | | | | |
| 9 | 90467–17128 | CLIP | 1 | 1 | | | | |
| 10 | 90105–06020 | BOLT, FLANGE | 1 | 1 | | | | |
| 11 | 90464–28003 | CLAMP | 1 | 1 | | | | |

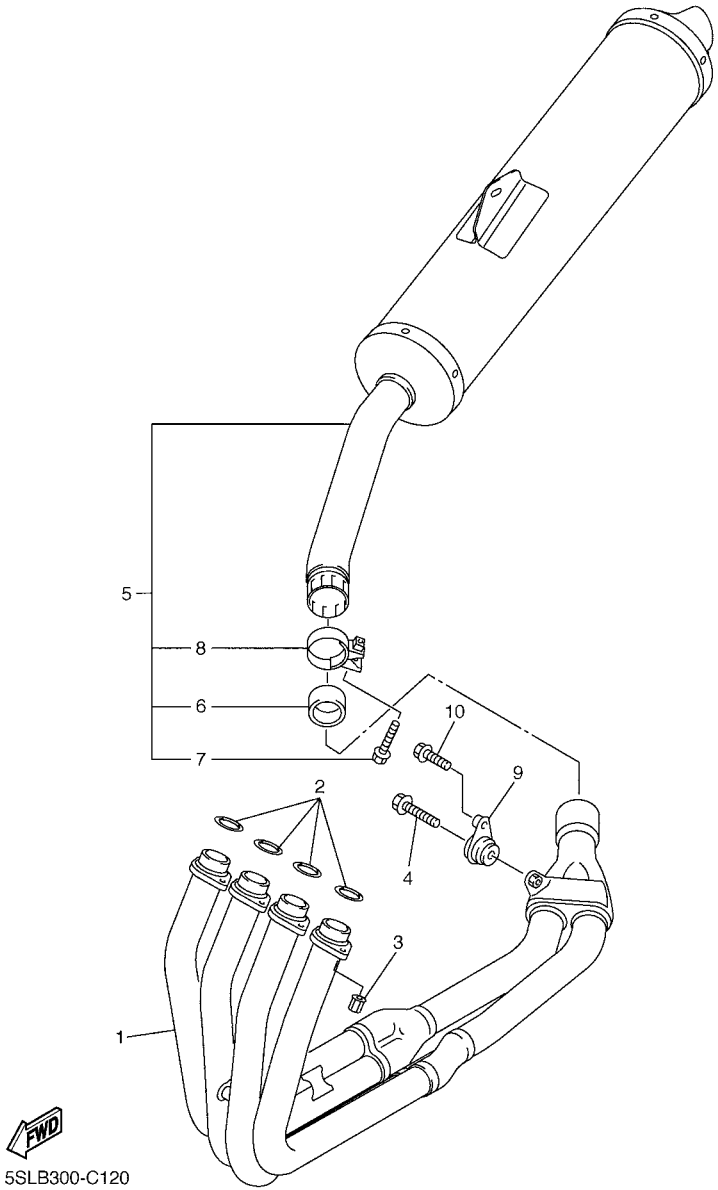


## FIG. 12 EXHAUST

| REF. NO. | PART NO. | DESCRIPTION | 5SLM | 5SLP | | | | REMARKS |
|---|---|---|---|---|---|---|---|---|
| 1 | 5SL–14602–01 | EXHAUST PIPE COMP. | 1 | 1 | | | | |
| 2 | 3YF–14613–01 | GASKET, EXHAUST PIPE | 4 | 4 | | | | |
| 3 | 90179–08410 | NUT | 8 | 8 | | | | |
| 4 | 95024–08035 | BOLT, FLANGE | 1 | 1 | | | | |
| 5 | 5SL–14710–20 | MUFFLER ASSY 1 | 1 | 1 | | | | |
| 6 | 5SL–14714–00 | .GASKET, MUFFLER | 1 | 1 | | | | |
| 7 | 95814–08045 | .BOLT, FLANGE | 1 | 1 | | | | |
| 8 | 5SL–14715–00 | .BAND, MUFFLER | 1 | 1 | | | | |
| 9 | 5SL–21446–10 | STAY, MUFFLER 2 | 1 | 1 | | | | |
| 10 | 90105–08054 | BOLT, FLANGE | 1 | 1 | | | | |

## FIG. 13 CRANKCASE

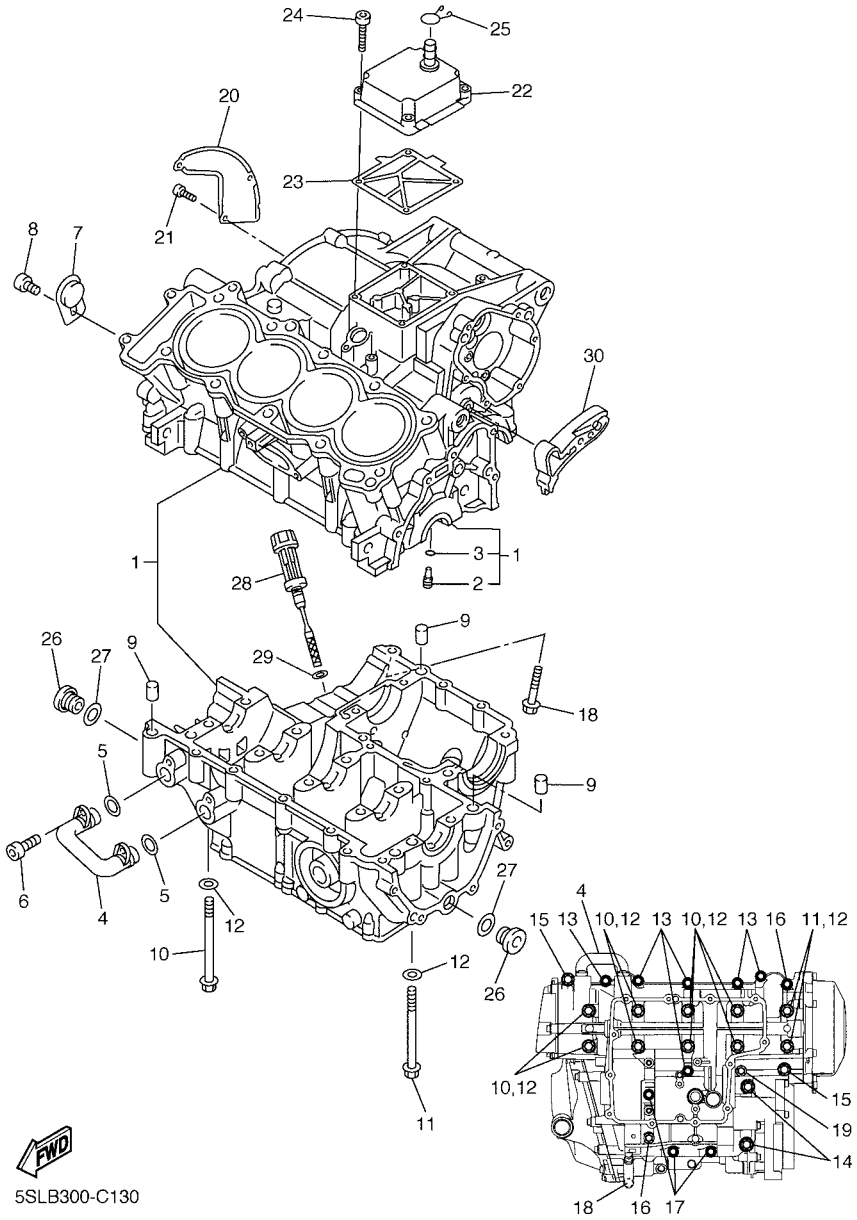


| REF. NO. | PART NO. | DESCRIPTION | 5SLM | 5SLP | | | | REMARKS |
|---|---|---|---|---|---|---|---|---|
| 1 | 5SL–15100–01 | CRANKCASE ASSY | 1 | 1 | | | | |
| 2 | 5EB–15155–00 | .NOZZLE 3 | 4 | 4 | | | | |
| 3 | 93210–04092 | .O-RING | 4 | 4 | | | | |
| 4 | 5EB–13418–00 | PIPE, OIL 2 | 1 | 1 | | | | |
| 5 | 93210–14579 | O-RING | 2 | 2 | | | | |
| 6 | 90110–06091 | BOLT, HEXAGON SOCKET HEAD | 2 | 2 | | | | |
| 7 | 5SL–15189–00 | PLUG | 1 | 1 | | | | |
| 8 | 90149–06020 | SCREW | 1 | 1 | | | | |
| 9 | 99530–10014 | PIN, DOWEL | 3 | 3 | | | | |
| 10 | 90105–087A0 | BOLT, FLANGE | 8 | 8 | | | | |
| 11 | 90105–086A9 | BOLT, FLANGE | 2 | 2 | | | | |
| 12 | 90201–087K3 | WASHER, PLATE | 10 | 10 | | | | |
| 13 | 95817–06055 | BOLT, FLANGE | 6 | 6 | | | | |
| 14 | 95817–08065 | BOLT, FLANGE | 2 | 2 | | | | |
| 15 | 90109–065G3 | BOLT | 2 | 2 | | | | |
| 16 | 95817–06065 | BOLT, FLANGE | 2 | 2 | | | | |
| 17 | 95817–06045 | BOLT, FLANGE | 3 | 3 | | | | |
| 18 | 95817–06100 | BOLT, FLANGE | 1 | 1 | | | | |
| 19 | 90105–06006 | BOLT, FLANGE | 1 | 1 | | | | |
| 20 | 5SL–11165–00 | PLATE, BREATHER | 1 | 1 | | | | |
| 21 | 90149–06020 | SCREW | 3 | 3 | | | | |
| 22 | 5VX–15413–01 | COVER | 1 | 1 | | | | |
| 23 | 5SL–15462–00 | GASKET, CRANKCASE COVER 3 | 1 | 1 | | | | |
| 24 | 91314–06025 | BOLT | 4 | 4 | | | | |
| 25 | 90467–14015 | CLIP | 1 | 1 | | | | |
| 26 | 36Y–15189–00 | PLUG | 2 | 2 | | | | |
| 27 | 93210–16325 | O-RING | 2 | 2 | | | | |

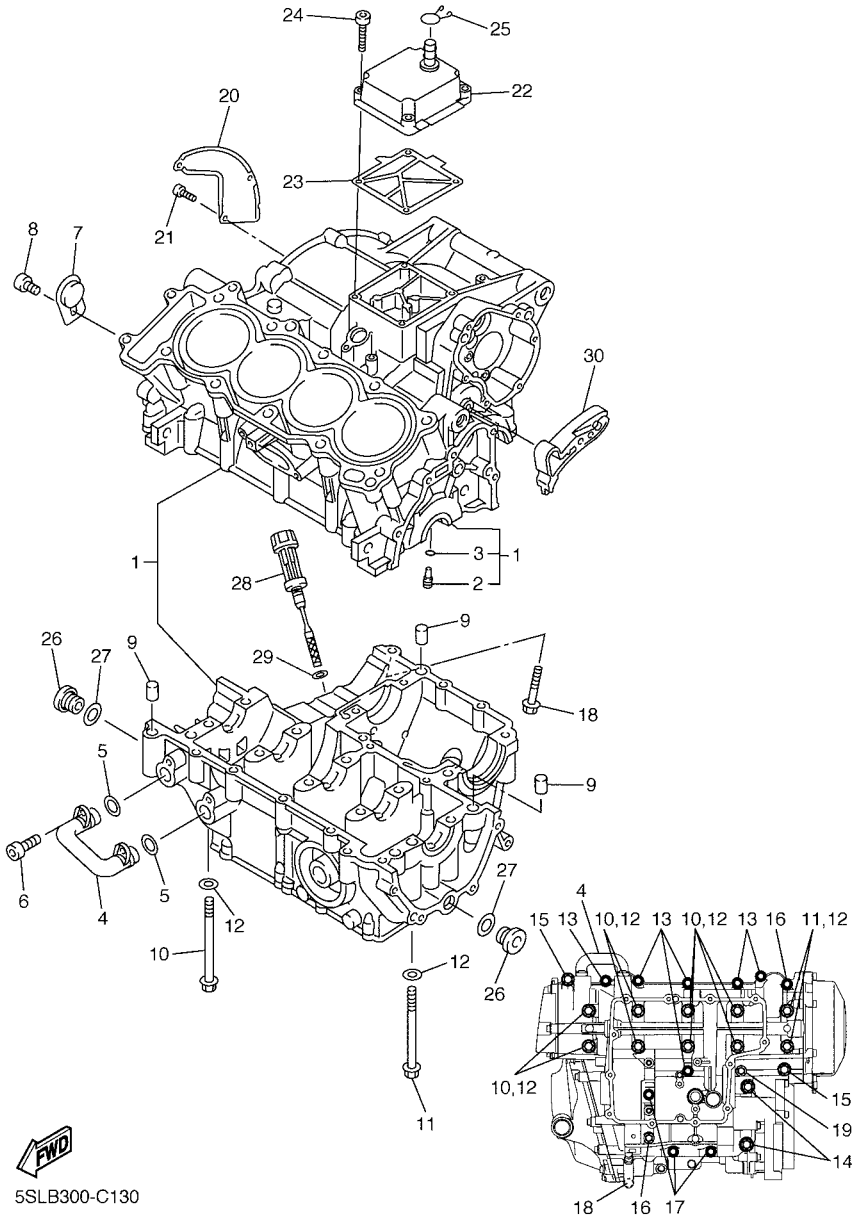


## FIG. 13 CRANKCASE

| REF. NO. | PART NO. | DESCRIPTION | 5SLM | 5SLP | | | | REMARKS |
|---|---|---|---|---|---|---|---|---|
| 28 | 5EB–15362–00 | PLUG, OIL LEVEL | 1 | 1 | | | | |
| 29 | 93210–09165 | O-RING | 1 | 1 | | | | |
| 30 | 5SL–15377–00 | GUIDE, INLET | 1 | 1 | | | | |

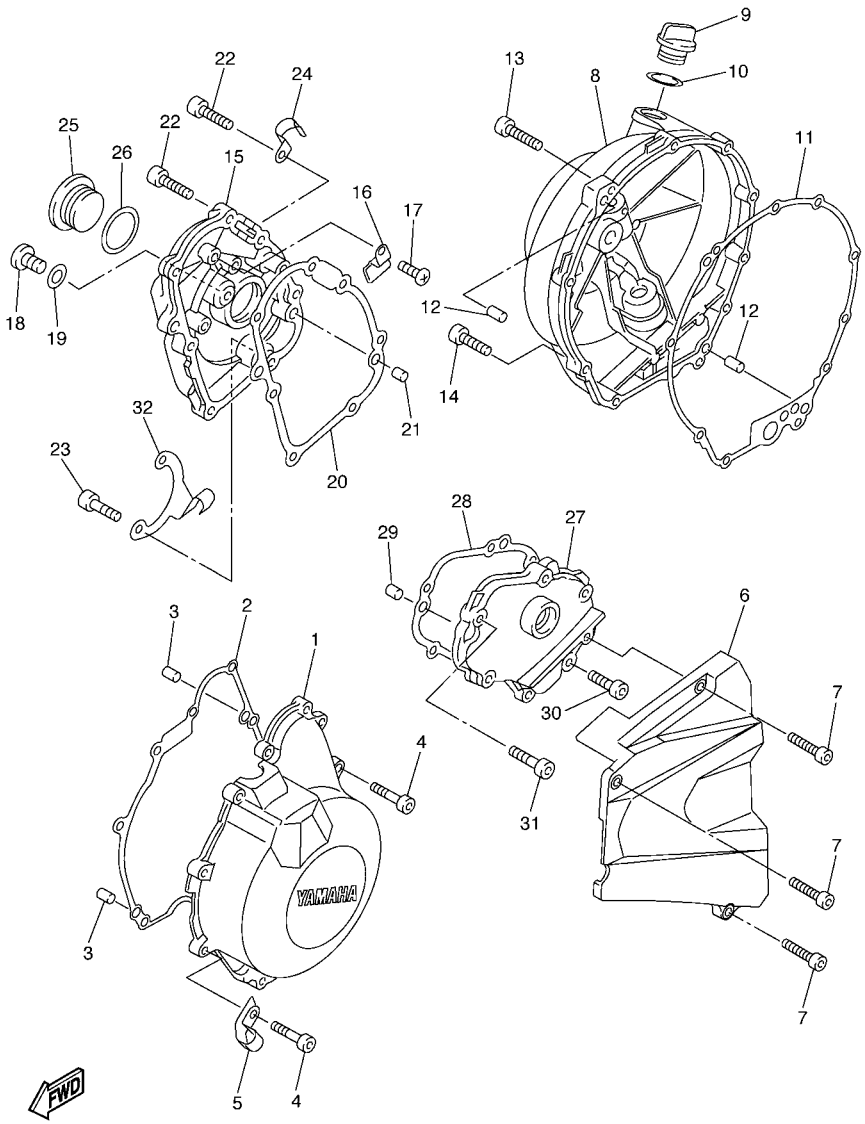


5SL1300-B140

## FIG. 14 CRANKCASE COVER 1

| REF. NO. | PART NO. | DESCRIPTION | 5SLM | 5SLP | | | | REMARKS |
|---|---|---|---|---|---|---|---|---|
| 1 | 5SL–15411–00 | COVER, CRANKCASE 1 | 1 | 1 | | | | |
| 2 | 5VX–15451–00 | GASKET, CRANKCASE COVER 1 | 1 | 1 | | | | |
| 3 | 99530–08012 | PIN, DOWEL | 2 | 2 | | | | |
| 4 | 91314–06025 | BOLT | 9 | 9 | | | | |
| 5 | 90461–10006 | CLAMP | 1 | 1 | | | | |
| 6 | 5SL–15418–00 | COVER, CHAIN CASE | 1 | 1 | | | | |
| 7 | 91314–06025 | BOLT | 3 | 3 | | | | |
| 8 | 5SL–15421–00 | COVER, CRANKCASE 2 | 1 | 1 | | | | |
| 9 | 3F9–15362–00 | PLUG, OIL LEVEL | 1 | 1 | | | | |
| 10 | 93210–27194 | O-RING | 1 | 1 | | | | |
| 11 | 5SL–15461–00 | GASKET, CRANKCASE COVER 2 | 1 | 1 | | | | |
| 12 | 93608–17263 | PIN, DOWEL | 2 | 2 | | | | |
| 13 | 90109–06031 | BOLT | 9 | 9 | | | | |
| 14 | 90110–06071 | BOLT, HEXAGON SOCKET HEAD | 1 | 1 | | | | |
| 15 | 5SL–15416–00 | COVER, OIL PUMP | 1 | 1 | | | | |
| 16 | 90465–14011 | CLAMP | 1 | 1 | | | | |
| 17 | 90157–06077 | SCREW, PAN HEAD | 1 | 1 | | | | |
| 18 | 92014–08014 | BOLT, BUTTON HEAD | 1 | 1 | | | | |
| 19 | 90430–08143 | GASKET | 1 | 1 | | | | |
| 20 | 5SL–15456–00 | GASKET, OIL PUMP COVER 1 | 1 | 1 | | | | |
| 21 | 99530–08012 | PIN, DOWEL | 2 | 2 | | | | |
| 22 | 90109–06014 | BOLT | 5 | 5 | | | | |
| 23 | 90109–06015 | BOLT | 2 | 2 | | | | |
| 24 | 90465–08395 | CLAMP | 1 | 1 | | | | |
| 25 | 90340–32004 | PLUG, STRAIGHT SCREW | 1 | 1 | | | | |
| 26 | 93210–32172 | O-RING | 1 | 1 | | | | |
| 27 | 5SL–15425–00 | COVER, GENERATOR 2 | 1 | 1 | | | | |

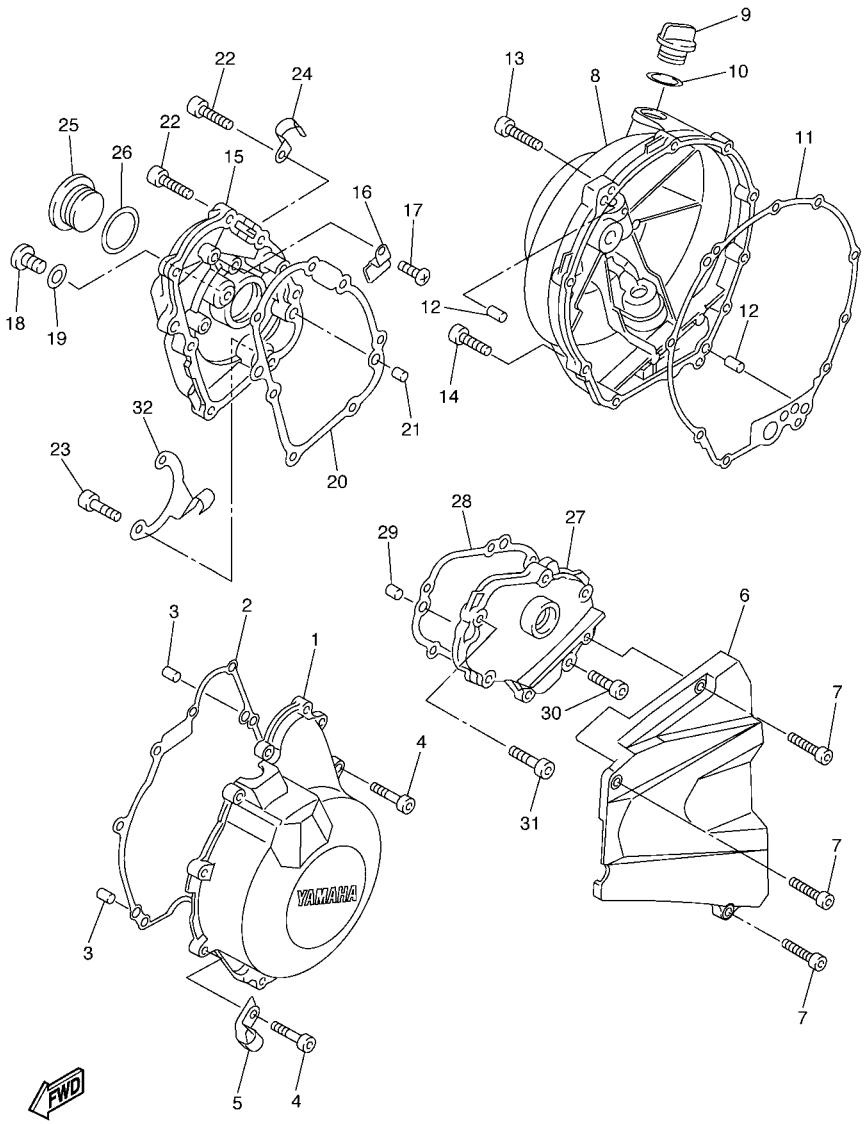


5SL1300-B140

## FIG. 14 CRANKCASE COVER 1

| REF. NO. | PART NO. | DESCRIPTION | 5SLM | 5SLP | | | | REMARKS |
|---|---|---|---|---|---|---|---|---|
| 28 | 5SL–15463–00 | GASKET, CARBURETOR COVER 2 | 1 | 1 | | | | |
| 29 | 99530–08012 | PIN, DOWEL | 2 | 2 | | | | |
| 30 | 90109–06014 | BOLT | 2 | 2 | | | | |
| 31 | 90109–06015 | BOLT | 4 | 4 | | | | |
| 32 | 5EB–15441–00 | HOLDER, CLUTCH CABLE | 1 | 1 | | | | |

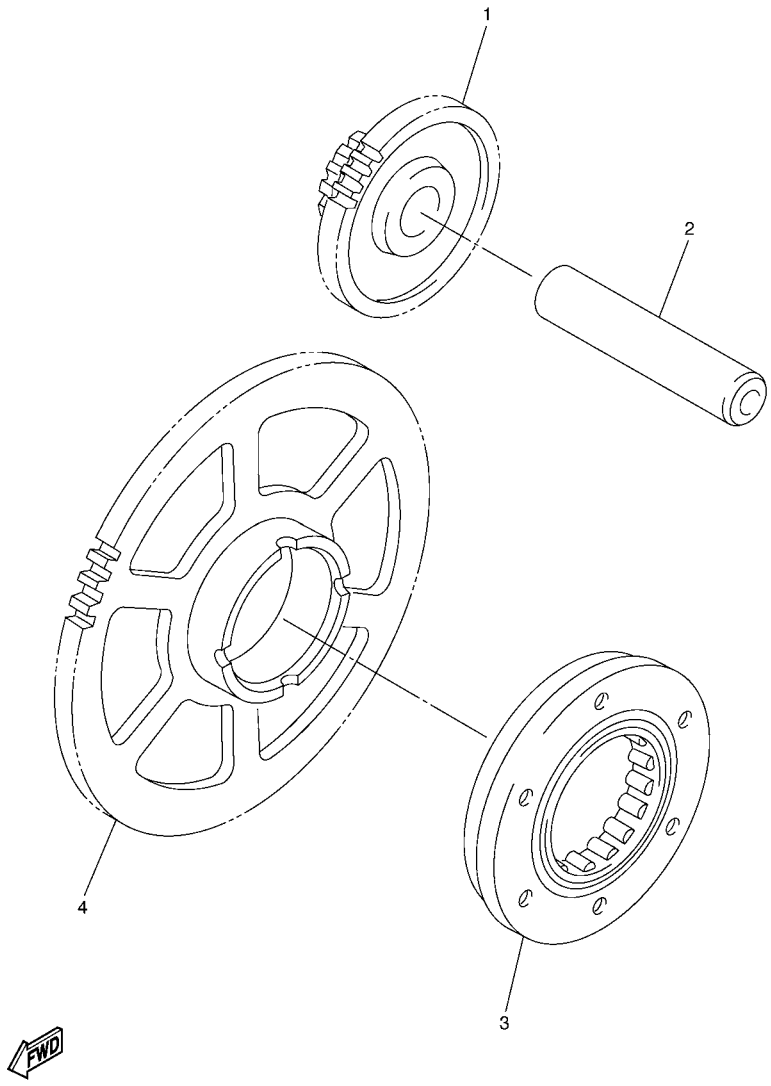


5SL1300-B150

## FIG. 15 STARTER

| REF. NO. | PART NO. | DESCRIPTION | 5SLM | 5SLP | | | | REMARKS |
|---|---|---|---|---|---|---|---|---|
| 1 | 5SL–15512–00 | GEAR, IDLER 1 | 1 | 1 | | | | |
| 2 | 5MT–15521–00 | SHAFT 1 | 1 | 1 | | | | |
| 3 | 5SL–15590–00 | STARTER ONE-WAY ASSY | 1 | 1 | | | | |
| 4 | 5MT–15515–00 | GEAR 3 | 1 | 1 | | | | |

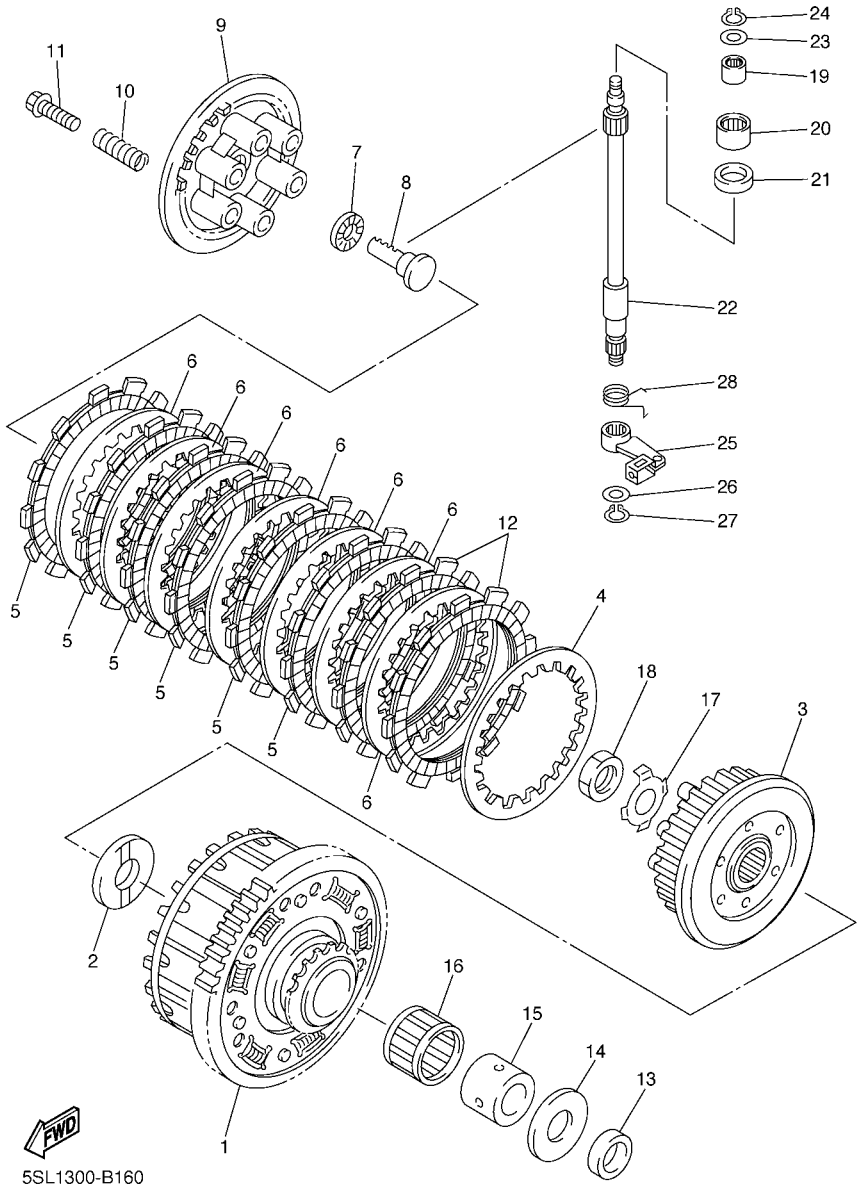


## FIG. 16 CLUTCH

| REF. NO. | PART NO. | DESCRIPTION | 5SLM | 5SLP | | | | REMARKS |
|---|---|---|---|---|---|---|---|---|
| 1 | 5SL–16150–10 | PRIMARY DRIVEN GEAR COMP. | 1 | 1 | | | | |
| 2 | 5EB–16154–00 | PLATE, THRUST 1 | 1 | 1 | | | | |
| 3 | 5SL–16371–00 | BOSS, CLUTCH | 1 | 1 | | | | |
| 4 | 168–16324–00 | PLATE, CLUTCH 1 (T=2.3) | 1 | 1 | | | | |
| 5 | 4FN–16321–00 | PLATE, FRICTION | 6 | 6 | | | | |
| 6 | 3J2–16324–00 | PLATE, CLUTCH 1 (T=2.0) | 7 | 7 | | | | |
| 7 | 93306–00304 | BEARING (B6003C4) | 1 | 1 | | | | |
| 8 | 5EB–16356–01 | ROD, PUSH 1 | 1 | 1 | | | | |
| 9 | 5EB–16351–01 | PLATE, PRESSURE 1 | 1 | 1 | | | | |
| 10 | 90501–237L0 | SPRING, COMPRESSION | 6 | 6 | | | | |
| 11 | 90159–06002 | SCREW, WITH WASHER | 6 | 6 | | | | |
| 12 | 5SL–16321–00 | PLATE, FRICTION | 2 | 2 | | | | |
| 13 | 90201–255A6 | WASHER, PLATE | 1 | 1 | | | | |
| 14 | 1AE–16164–00 | PLATE, THRUST 2 | 1 | 1 | | | | |
| 15 | 90560–25270 | SPACER | 1 | 1 | | | | |
| 16 | 93310–340N8 | BEARING | 1 | 1 | | | | |
| 17 | 90215–20004 | WASHER, LOCK | 1 | 1 | | | | |
| 18 | 90170–20008 | NUT | 1 | 1 | | | | |
| 19 | 93317–11020 | BEARING | 1 | 1 | | | | |
| 20 | 93315–31502 | BEARING | 1 | 1 | | | | |
| 21 | 93102–15212 | OIL SEAL | 1 | 1 | | | | |
| 22 | 5EB–16382–00 | AXLE, PUSH LEVER | 1 | 1 | | | | |
| 23 | 92907–08600 | WASHER, PLATE | 1 | 1 | | | | |
| 24 | 99001–07600 | CIRCLIP | 1 | 1 | | | | |
| 25 | 5SL–16340–00 | PUSH LEVER ASSY | 1 | 1 | | | | |
| 26 | 90201–10614 | WASHER, PLATE | 1 | 1 | | | | |
| 27 | 99001–09600 | CIRCLIP | 1 | 1 | | | | |

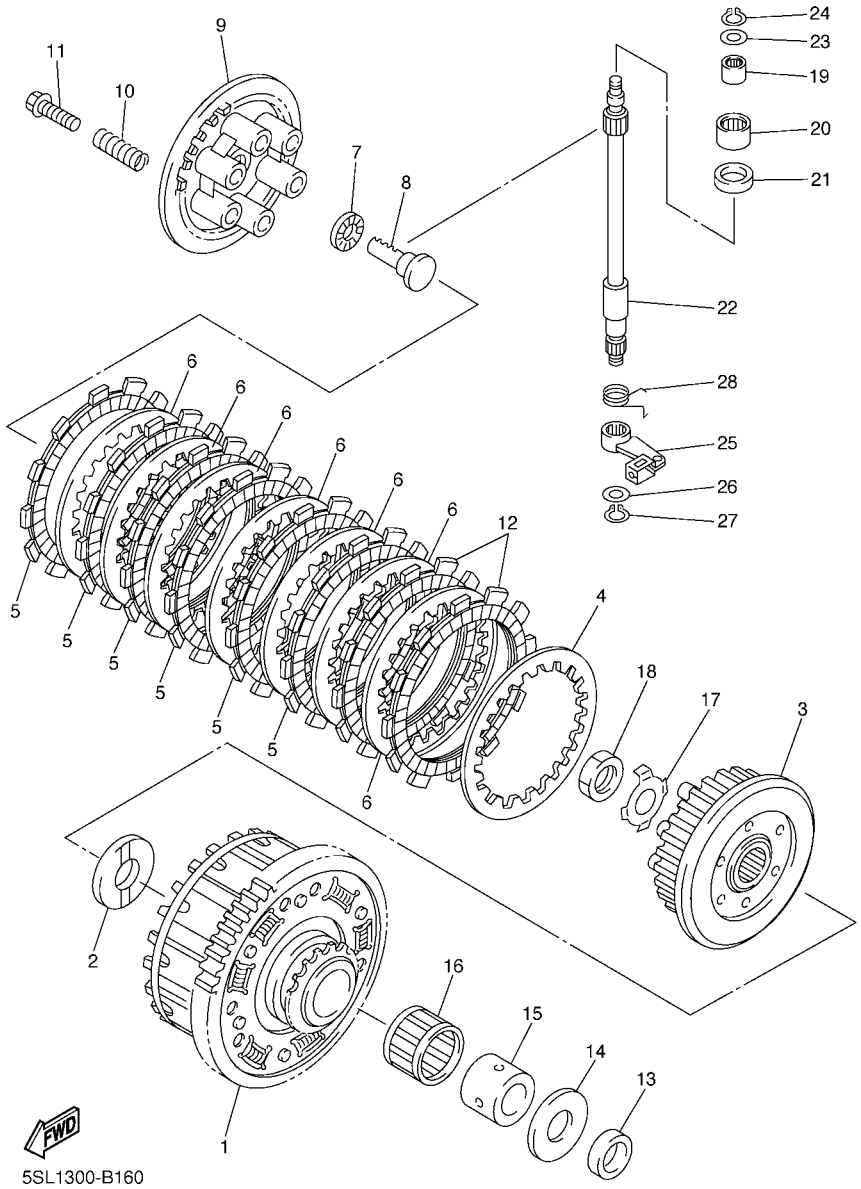


## FIG. 16 CLUTCH

| REF. NO. | PART NO. | DESCRIPTION | 5SLM | 5SLP | | | | REMARKS |
|---|---|---|---|---|---|---|---|---|
| 28 | 90508–165B1 | SPRING, TORSION | 1 | 1 | | | | |

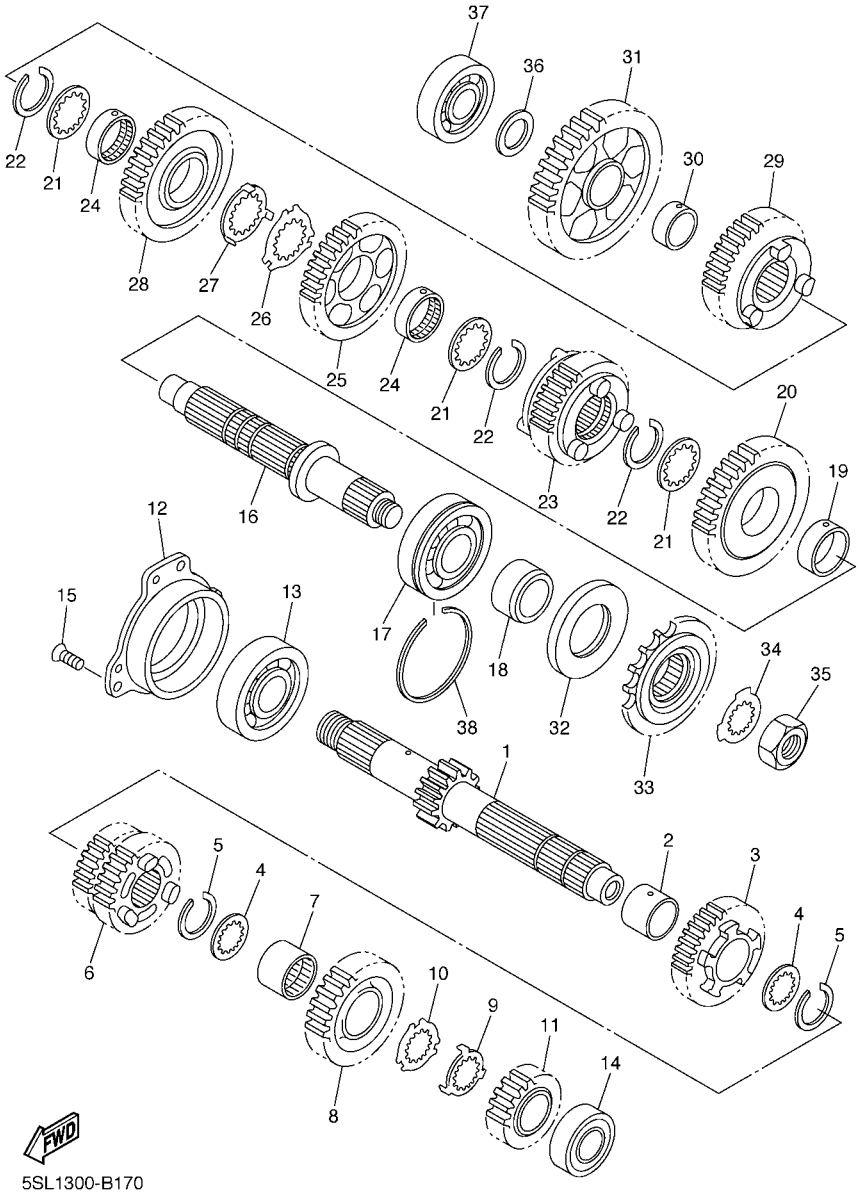


5SL1300-B170

## FIG. 17 TRANSMISSION

| REF. NO. | PART NO. | DESCRIPTION | 5SLM | 5SLP | | | | REMARKS |
|---|---|---|---|---|---|---|---|---|
| 1 | 5SL–17411–00 | AXLE, MAIN (13T) | 1 | 1 | | | | |
| 2 | 90387–253M6 | COLLAR | 1 | 1 | | | | |
| 3 | 5SL–17151–20 | GEAR, 5TH PINION (21T) | 1 | 1 | | | | |
| 4 | 90209–21332 | WASHER | 2 | 2 | | | | |
| 5 | 93440–25186 | CIRCLIP | 2 | 2 | | | | |
| 6 | 5SL–17131–20 | GEAR, 3RD PINION (18T/24T) | 1 | 1 | | | | |
| 7 | 90387–2513E | COLLAR | 1 | 1 | | | | |
| 8 | 5SL–17161–00 | GEAR, 6TH PINION (24T) | 1 | 1 | | | | |
| 9 | 90209–22352 | WASHER | 1 | 1 | | | | |
| 10 | 90209–21351 | WASHER | 1 | 1 | | | | |
| 11 | 5SL–17121–00 | GEAR, 2ND PINION (19T) | 1 | 1 | | | | |
| 12 | 5EB–15163–01 | HOUSING, BEARING 1 | 1 | 1 | | | | |
| 13 | 93306–30525 | BEARING (B6305) | 1 | 1 | | | | |
| 14 | 93306–20464 | BEARING | 1 | 1 | | | | |
| 15 | 90151–06008 | SCREW, COUNTERSUNK | 3 | 3 | | | | |
| 16 | 5SL–17421–00 | AXLE, DRIVE | 1 | 1 | | | | |
| 17 | 93306–30546 | BEARING (B6305A5 SPECIAL) | 1 | 1 | | | | |
| 18 | 90387–2504A | COLLAR | 1 | 1 | | | | |
| 19 | 90387–2813C | COLLAR | 1 | 1 | | | | |
| 20 | 5SL–17221–10 | GEAR, 2ND WHEEL (37T) | 1 | 1 | | | | |
| 21 | 90209–25342 | WASHER | 3 | 3 | | | | |
| 22 | 93440–28062 | CIRCLIP | 3 | 3 | | | | |
| 23 | 5SL–17261–10 | GEAR, 6TH WHEEL (26T) | 1 | 1 | | | | |
| 24 | 90387–2813D | COLLAR | 2 | 2 | | | | |
| 25 | 5SL–17241–00 | GEAR, 4TH WHEEL (32T) | 1 | 1 | | | | |
| 26 | 90209–25349 | WASHER | 1 | 1 | | | | |
| 27 | 90209–25350 | WASHER | 1 | 1 | | | | |

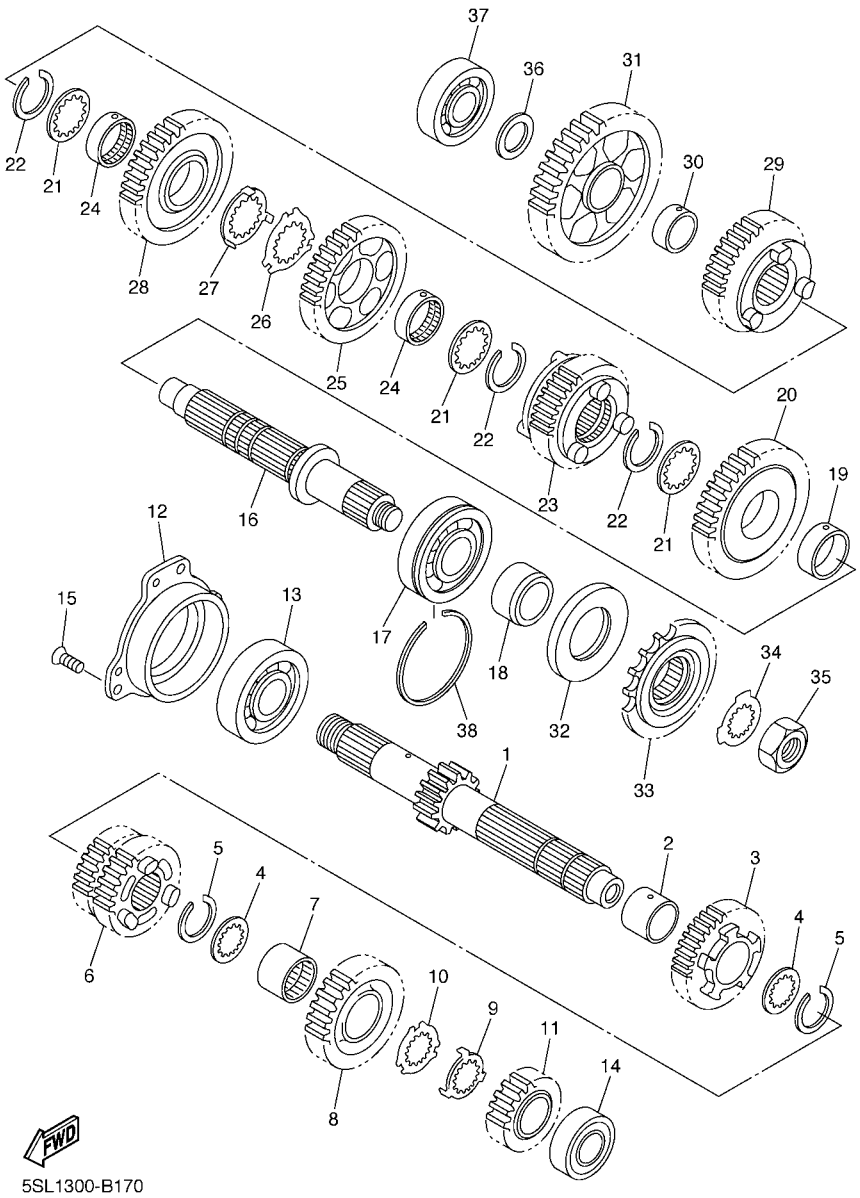


## FIG. 17 TRANSMISSION

| REF. NO. | PART NO. | DESCRIPTION | 5SLM | 5SLP | | | | REMARKS |
|---|---|---|---|---|---|---|---|---|
| 28 | 5SL–17231–00 | GEAR, 3RD WHEEL (28T) | 1 | 1 | | | | |
| 29 | 5SL–17251–00 | GEAR, 5TH WHEEL (25T) | 1 | 1 | | | | |
| 30 | 90387–2202V | COLLAR | 1 | 1 | | | | |
| 31 | 5SL–17211–00 | GEAR, 1ST WHEEL (37T) | 1 | 1 | | | | |
| 32 | 93102–35423 | OIL SEAL | 1 | 1 | | | | |
| 33 | 5SL–17460–00 | SPROCKET, DRIVE | 1 | 1 | | | | |
| 34 | 90215–21290 | WASHER, LOCK | 1 | 1 | | | | |
| 35 | 90179–18667 | NUT | 1 | 1 | | | | |
| 36 | 90201–20278 | WASHER, PLATE | 1 | 1 | | | | |
| 37 | 93306–20464 | BEARING | 1 | 1 | | | | |
| 38 | 278–17424–01 | CIRCLIP 1 | 1 | 1 | | | | |

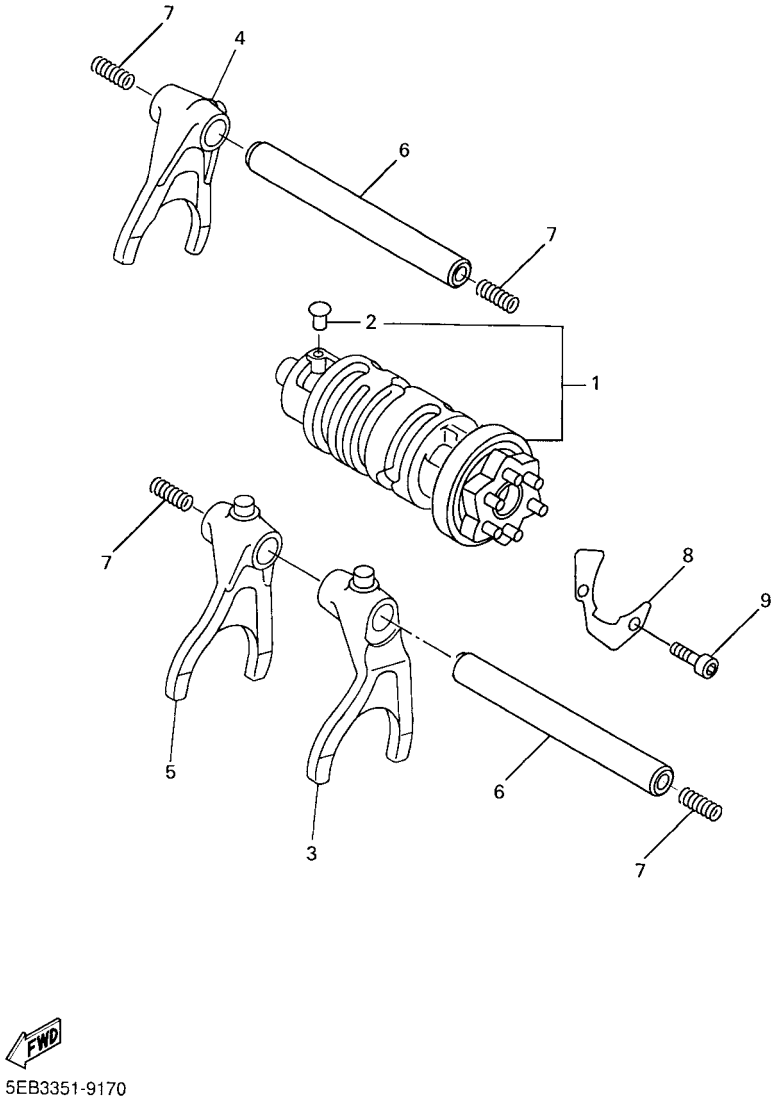


## FIG. 18 SHIFT CAM & FORK

| REF. NO. | PART NO. | DESCRIPTION | 5SLM | 5SLP | | | | REMARKS |
|---|---|---|---|---|---|---|---|---|
| 1 | 5SL–18540–00 | SHIFT CAM ASSY | 1 | 1 | | | | |
| 2 | 136–18542–00 | .POINT, NEUTRAL | 1 | 1 | | | | |
| 3 | 5SL–18511–00 | FORK, SHIFT 1 | 1 | 1 | | | | |
| 4 | 5MT–18512–00 | FORK, SHIFT 2 | 1 | 1 | | | | |
| 5 | 5EB–18513–00 | FORK, SHIFT 3 | 1 | 1 | | | | |
| 6 | 4XV–18531–00 | BAR, SHIFT FORK GUIDE 1 | 2 | 2 | | | | |
| 7 | 90501–064L1 | SPRING, COMPRESSION | 4 | 4 | | | | |
| 8 | 5EB–18536–00 | STOPPER, SHIFT BAR | 1 | 1 | | | | |
| 9 | 90110–06018 | BOLT, HEXAGON SOCKET HEAD | 2 | 2 | | | | |

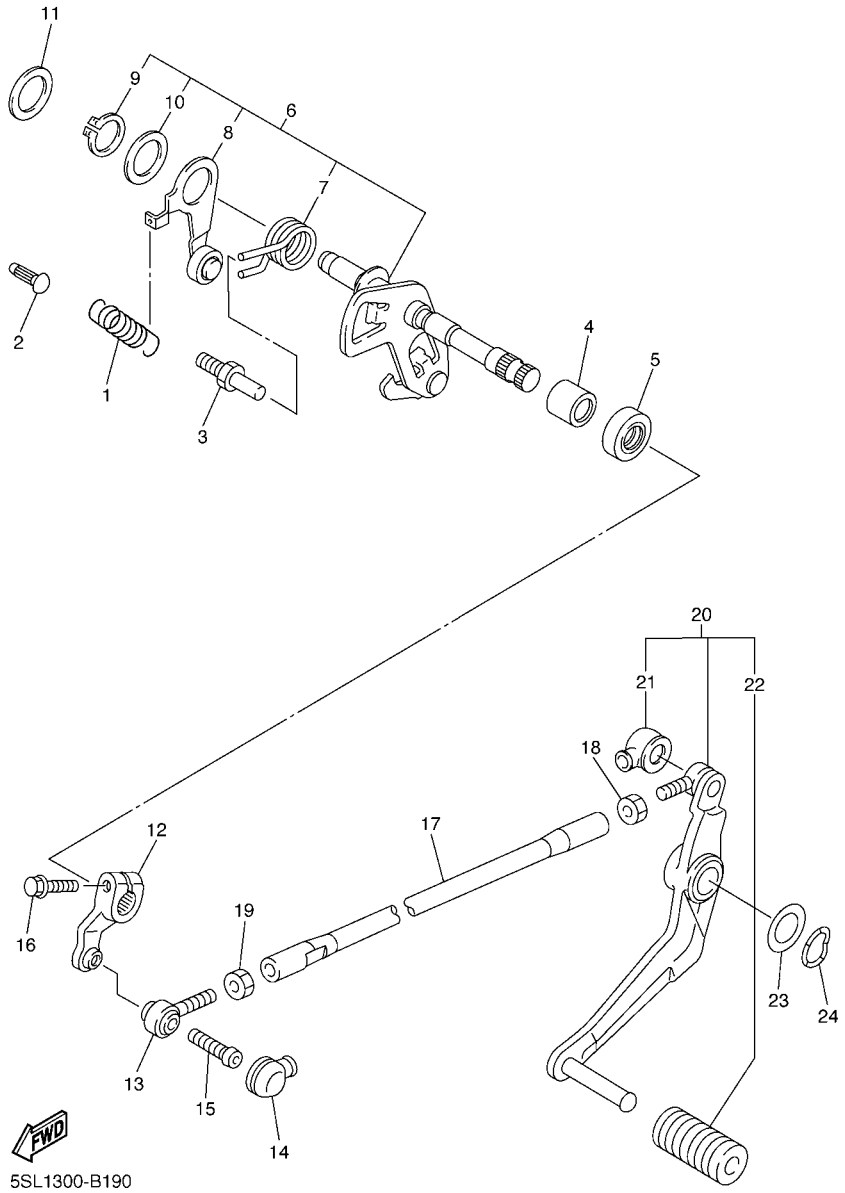


## FIG. 19 SHIFT SHAFT

| REF. NO. | PART NO. | DESCRIPTION | 5SLM | 5SLP | | | | REMARKS |
|---|---|---|---|---|---|---|---|---|
| 1 | 90506–14003 | SPRING, TENSION | 1 | 1 | | | | |
| 2 | 132–16346–00 | HOOK, SPRING | 1 | 1 | | | | |
| 3 | 5SL–18127–00 | STOPPER, SCREW | 1 | 1 | | | | |
| 4 | 93317–11287 | BEARING | 1 | 1 | | | | |
| 5 | 93101–12004 | OIL SEAL | 1 | 1 | | | | |
| 6 | 5SL–18101–00 | SHIFT SHAFT ASSY | 1 | 1 | | | | |
| 7 | 90508–295B2 | .SPRING, TORSION | 1 | 1 | | | | |
| 8 | 5SL–18140–00 | .STOPPER LEVER ASSY | 1 | 1 | | | | |
| 9 | 99009–17400 | .CIRCLIP | 1 | 1 | | | | |
| 10 | 90201–177G4 | .WASHER, PLATE | 1 | 1 | | | | |
| 11 | 90201–154E8 | WASHER, PLATE (T=1.0) | 1 | 1 | | | | |
| 12 | 5EB–18112–01 | ARM, SHIFT | 1 | 1 | | | | |
| 13 | 5LV–18116–00 | JOINT, ROD 1 | 1 | 1 | | | | |
| 14 | 4XV–18154–00 | COVER, DUST | 1 | 1 | | | | |
| 15 | 90111–06019 | BOLT | 1 | 1 | | | | |
| 16 | 95824–06020 | BOLT, FLANGE | 1 | 1 | | | | |
| 17 | 5SL–18115–00 | ROD, SHIFT | 1 | 1 | | | | |
| 18 | 90170–08358 | NUT | 1 | 1 | | | | |
| 19 | 95304–06700 | NUT | 1 | 1 | | | | |
| 20 | 5EB–18110–10 | SHIFT PEDAL ASSY | 1 | 1 | | | | |
| 21 | 2H9–18154–00 | .COVER, DUST | 1 | 1 | | | | |
| 22 | 5EB–18113–00 | .COVER, SHIFT PEDAL | 1 | 1 | | | | |
| 23 | 90201–12013 | WASHER, PLATE | 1 | 1 | | | | |
| 24 | 90206–12074 | WASHER, WAVE | 1 | 1 | | | | |

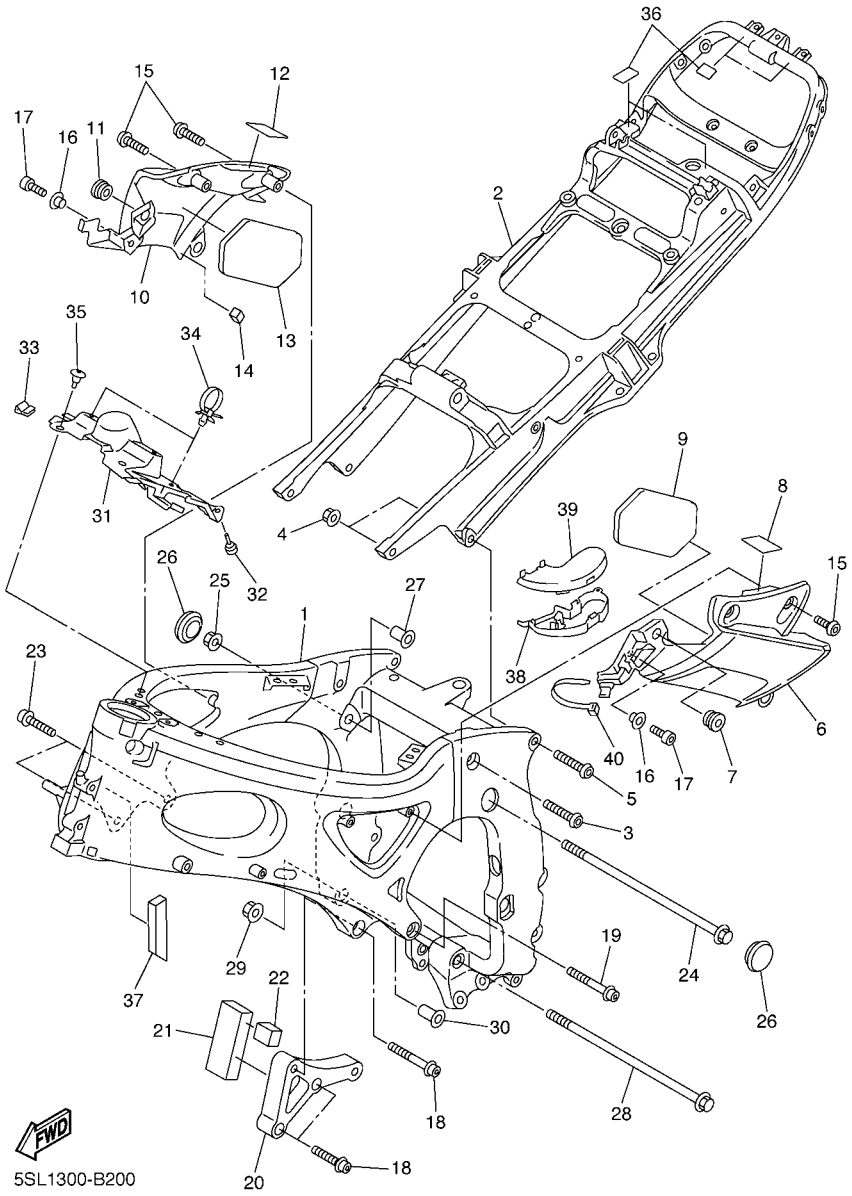


## FIG. 20 FRAME

| REF. NO. | PART NO. | DESCRIPTION | 5SLM | 5SLP | | | | REMARKS |
|---|---|---|---|---|---|---|---|---|
| 1 | 5SL–21110–01 | FRAME COMP. | 1 | | | | | |
| | 5SL–21110–11 | FRAME COMP. | | 1 | | | | |
| 2 | 5SL–21190–00 | REAR FRAME COMP. | 1 | 1 | | | | |
| 3 | 90149–10007 | SCREW | 2 | 2 | | | | |
| 4 | 95607–10200 | NUT, U FLANGE | 4 | 4 | | | | |
| 5 | 90149–10006 | SCREW | 2 | 2 | | | | |
| 6 | 5SL–2117V–00 | COVER 7 | 1 | 1 | | | | |
| 7 | 90480–13398 | GROMMET | 1 | 1 | | | | |
| 8 | 3KJ–24723–00 | DAMPER, SEAT | 1 | 1 | | | | |
| 9 | 5SL–28415–00 | DAMPER 1 | 1 | 1 | | | | |
| 10 | 5SL–2117W–00 | COVER 8 | 1 | 1 | | | | |
| 11 | 90480–13398 | GROMMET | 1 | 1 | | | | |
| 12 | 3KJ–24723–00 | DAMPER, SEAT | 1 | 1 | | | | |
| 13 | 5SL–28415–00 | DAMPER 1 | 1 | 1 | | | | |
| 14 | 5SL–21649–00 | DAMPER | 1 | 1 | | | | |
| 15 | 90111–05006 | BOLT | 4 | 4 | | | | |
| 16 | 90387–050X4 | COLLAR | 2 | 2 | | | | |
| 17 | 91317–05012 | BOLT | 2 | 2 | | | | |
| 18 | 90110–10008 | BOLT, HEXAGON SOCKET HEAD | 3 | 3 | | | | |
| 19 | 90110–10007 | BOLT, HEXAGON SOCKET HEAD | 1 | 1 | | | | |
| 20 | 5SL–21283–00 | SUPPORT, ENGINE | 1 | 1 | | | | |
| 21 | 5SL–21488–00 | DAMPER | 1 | 1 | | | | |
| 22 | 5SL–21486–00 | DAMPER 2 | 1 | 1 | | | | |
| 23 | 90110–10008 | BOLT, HEXAGON SOCKET HEAD | 2 | 2 | | | | |
| 24 | 90105–10042 | BOLT, FLANGE | 1 | 1 | | | | |
| 25 | 90179–10696 | NUT | 1 | 1 | | | | |
| 26 | 90338–27007 | PLUG | 2 | 2 | | | | |

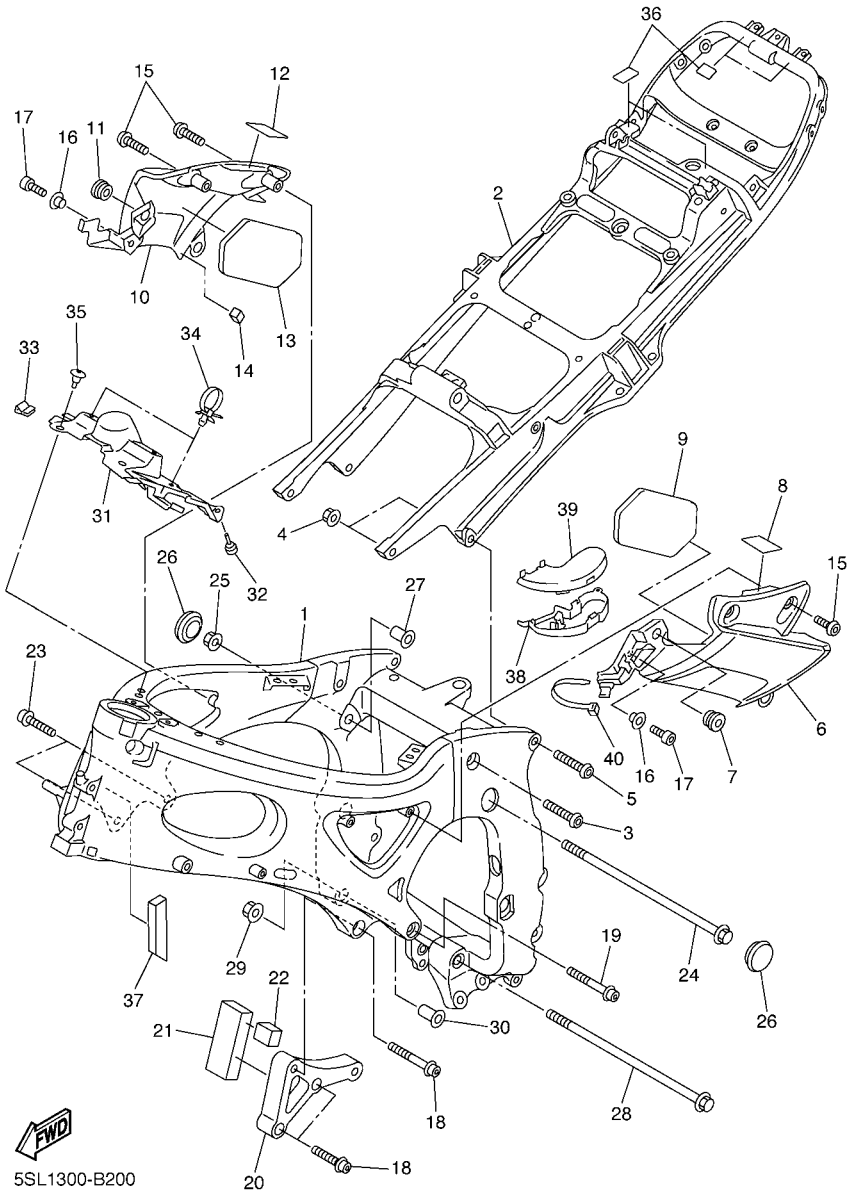


## FIG. 20 FRAME

| REF. NO. | PART NO. | DESCRIPTION | 5SLM | 5SLP | | | | REMARKS |
|---|---|---|---|---|---|---|---|---|
| 27 | 5EB–21495–00 | BOLT, ENGINE ADJUSTING | 1 | 1 | | | | |
| 28 | 90105–106A2 | BOLT, FLANGE | 1 | 1 | | | | |
| 29 | 90179–10696 | NUT | 1 | 1 | | | | |
| 30 | 5EB–21495–00 | BOLT, ENGINE ADJUSTING | 1 | 1 | | | | |
| 31 | 5SL–2117M–10 | COVER 2 | 1 | 1 | | | | |
| 32 | 36Y–21639–00 | DAMPER 2 | 2 | 2 | | | | |
| 33 | 5SL–21208–00 | SEAL SET, 1 | 1 | 1 | | | | |
| 34 | 90464–12036 | CLAMP | 2 | 2 | | | | |
| 35 | 90269–07007 | RIVET | 2 | 2 | | | | |
| 36 | 5SL–21268–00 | SEAL | 4 | 4 | | | | |
| 37 | 5SL–2139X–00 | DAMPER | 1 | 1 | | | | |
| 38 | 5SL–8258J–00 | HOUSING, CONNECTEUR 1 | 1 | 1 | | | | |
| 39 | 5SL–8259J–00 | HOUSING, CONNECTEUR 2 | 1 | 1 | | | | |
| 40 | 90464–15195 | CLAMP | 1 | 1 | | | | |

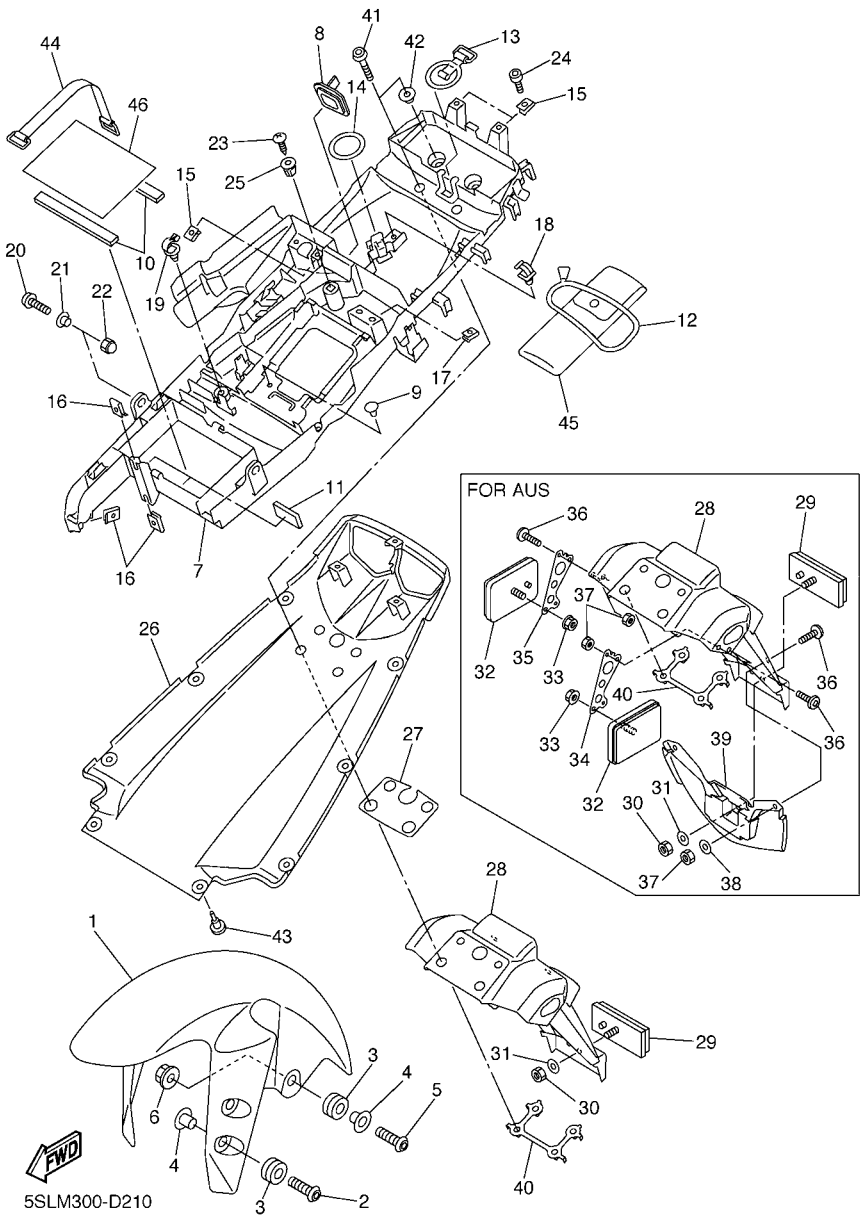


## FIG. 21 FENDER

| REF. NO. | PART NO. | DESCRIPTION | 5SLM | 5SLP | | | | REMARKS |
|---|---|---|---|---|---|---|---|---|
| 1 | 5PW–21511–00–P0 | FENDER, FRONT | 1 | 1 | | | | UR VRC1 |
| | 5PW–21511–00–P1 | FENDER, FRONT | 1 | 1 | | | | UR DPBMC |
| | 5PW–21511–00–P6 | FENDER, FRONT | 1 | 1 | | | | UR SMX |
| 2 | 90111–06043 | BOLT | 4 | 4 | | | | |
| 3 | 90480–12072 | GROMMET | 6 | 6 | | | | |
| 4 | 90387–065J6 | COLLAR | 6 | 6 | | | | |
| 5 | 90111–06030 | BOLT | 2 | 2 | | | | |
| 6 | 95707–06500 | NUT, FLANGE | 2 | 2 | | | | |
| 7 | 5SL–8212B–01 | BOX, BATTERY 1 | 1 | 1 | | | | |
| 8 | 5MT–2172X–00 | COVER, TAILLIGHT | 1 | 1 | | | | |
| 9 | 90338–06018 | PLUG | 2 | 2 | | | | |
| 10 | 1AE–2834E–00 | DAMPER 1 | 2 | 2 | | | | |
| 11 | 3KJ–24723–00 | DAMPER, SEAT | 5 | 5 | | | | |
| 12 | 3YX–21376–00 | BAND, TOOL | 1 | 1 | | | | |
| 13 | 5SL–21646–00 | BAND | 1 | 1 | | | | |
| 14 | 5SL–21647–00 | BAND | 1 | 1 | | | | |
| 15 | 90183–05076 | NUT, SPRING | 3 | 3 | | | | |
| 16 | 90183–06053 | NUT, SPRING | 3 | 3 | | | | |
| 17 | 90183–04039 | NUT, SPRING | 2 | 2 | | | | |
| 18 | 90464–07259 | CLAMP | 1 | 1 | | | | |
| 19 | 90464–13249 | CLAMP | 1 | 1 | | | | |
| 20 | 90111–06007 | BOLT | 2 | 2 | | | | |
| 21 | 90387–06022 | COLLAR | 2 | 2 | | | | |
| 22 | 90176–06055 | NUT, CROWN | 2 | 2 | | | | |
| 23 | 97707–60020 | SCREW, TAPPING | 1 | 1 | | | | |
| 24 | 91317–05012 | BOLT | 2 | 2 | | | | |
| 25 | 90338–08226 | PLUG | 1 | 1 | | | | |

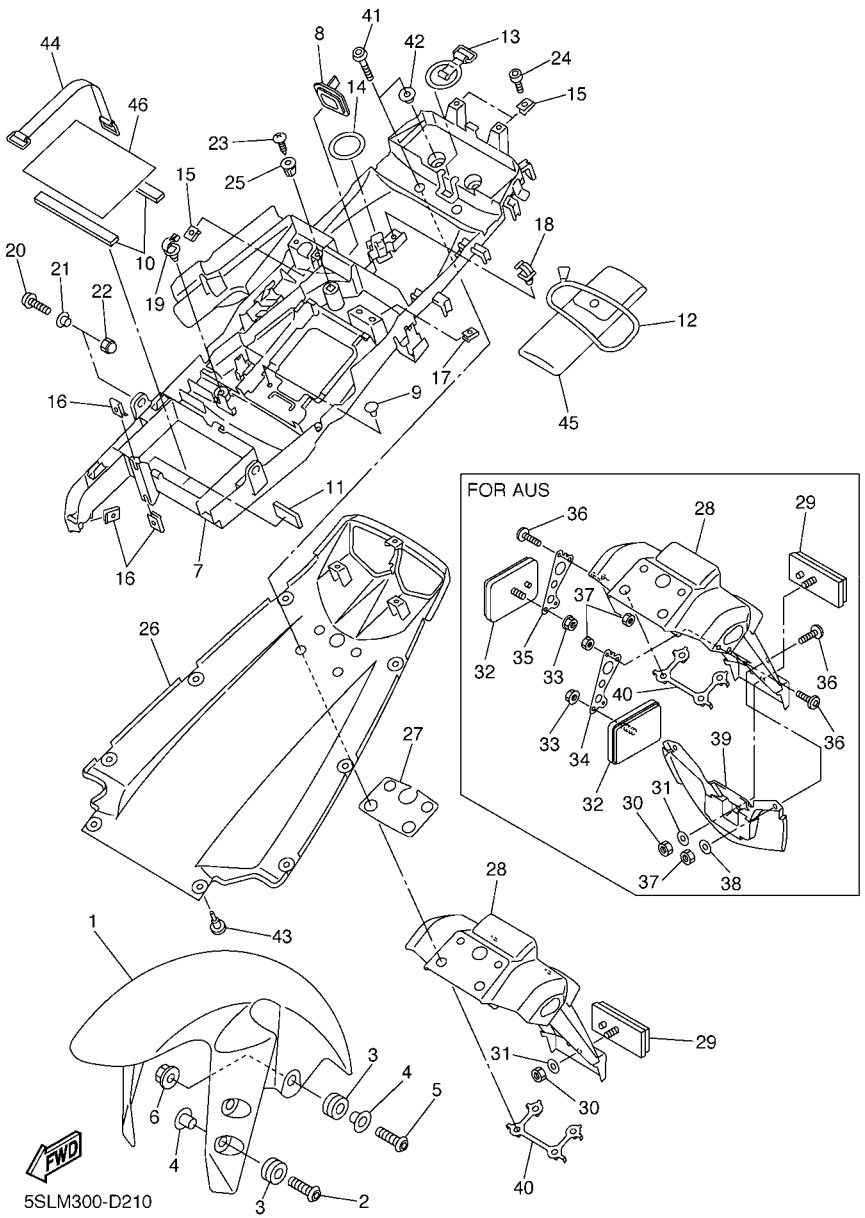


## FIG. 21 FENDER

| REF. NO. | PART NO. | DESCRIPTION | 5SLM | 5SLP | | | | REMARKS |
|---|---|---|---|---|---|---|---|---|
| 26 | 5SL–21611–00–P0 | FENDER, REAR | 1 | 1 | | | | UR VRC1 |
| | 5SL–21611–00–P1 | FENDER, REAR | 1 | 1 | | | | UR DPBMC |
| | 5SL–21611–00–P4 | FENDER, REAR | 1 | 1 | | | | UR SMX |
| 27 | 5SL–21669–00 | SEAL | 1 | 1 | | | | |
| 28 | 5SL–21629–01 | GUARD, MUD | 1 | | | | | |
| | 5SL–21629–21 | GUARD, MUD | | 1 | | | | |
| 29 | 3Y6–85130–02 | REAR REFLECTOR ASSY | 1 | 1 | | | | |
| 30 | 95607–05100 | NUT, U | 1 | 1 | | | | |
| 31 | 90201–05725 | WASHER, PLATE | 1 | 1 | | | | |
| 32 | 5SL–85110–00 | REFLECTOR ASSY | | 2 | | | | |
| 33 | 95707–05500 | NUT, FLANGE | | 2 | | | | |
| 34 | 5SL–21688–00 | BRACKET, REAR STAY | | 1 | | | | |
| 35 | 5SL–21689–00 | BRACKET, REAR STAY 2 | | 1 | | | | |
| 36 | 90150–04041 | SCREW, ROUND HEAD | | 6 | | | | |
| 37 | 95607–04100 | NUT, U | | 6 | | | | |
| 38 | 90201–04018 | WASHER, PLATE | | 2 | | | | |
| 39 | 5SL–21621–00 | FLAP | | 1 | | | | |
| 40 | 5PW–2161G–00 | BRACKET 6 | 1 | 1 | | | | |
| 41 | 92017–06020 | BOLT, BUTTON HEAD | 4 | 4 | | | | |
| 42 | 90387–065G0 | COLLAR | 2 | 2 | | | | |
| 43 | 90269–07077 | RIVET | 2 | 2 | | | | |
| 44 | 5JJ–82131–00 | BAND, BATTERY | 1 | 1 | | | | |
| 45 | 5SL–28100–00 | TOOL KIT | 1 | 1 | | | | |
| 46 | 5EB–14733–00 | MAT 1 | 1 | 1 | | | | |

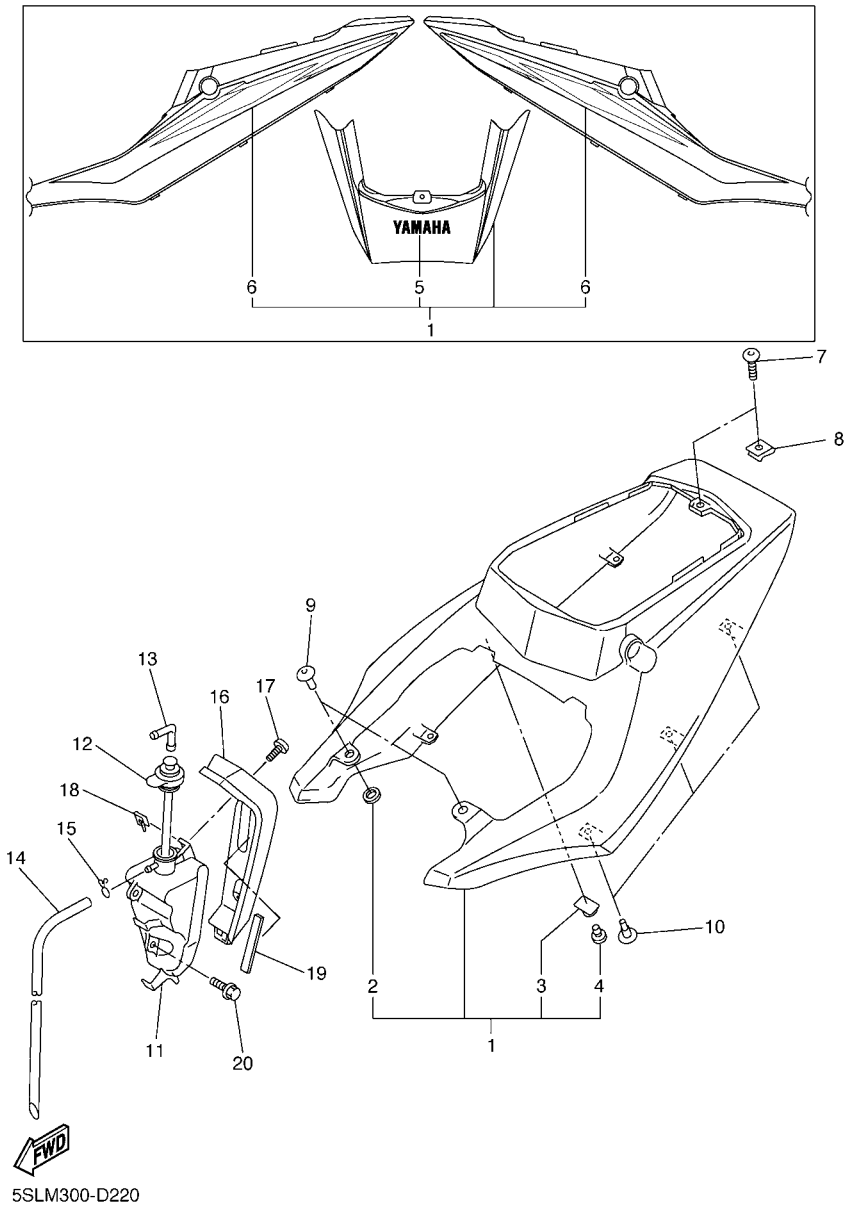


5SLM300-D220

## FIG. 22 SIDE COVER

| REF. NO. | PART NO. | DESCRIPTION | 5SLM | 5SLP | | | | REMARKS |
|---|---|---|---|---|---|---|---|---|
| 1 | 5SL–Y2171–C0–P0 | COVER, SIDE 1 | 1 | 1 | | | | UR VRC1 |
| | 5SL–Y2171–E0–P1 | COVER, SIDE 1 | 1 | 1 | | | | UR DPBMC |
| | 5SL–Y2171–50–P4 | COVER, SIDE 1 | 1 | 1 | | | | UR SMX |
| 2 | 5PW–2174X–00 | .DAMPER | 2 | 2 | | | | |
| 3 | 5SL–2172E–00 | .STAY, SIDE COVER 1 | 1 | 1 | | | | |
| 4 | 90338–06018 | .PLUG | 1 | 1 | | | | |
| 5 | 99244–00080 | .EMBLEM, YAMAHA | 1 | 1 | | | | UR FOR VRC1 |
| | 99241–00080 | .EMBLEM, YAMAHA | 1 | 1 | | | | UR FOR DPBMC |
| | 99247–00080 | .EMBLEM, YAMAHA | 1 | 1 | | | | UR FOR SMX |
| 6 | 5SL–2173L–40 | .GRAPHIC SET 1 | 1 | 1 | | | | UR FOR VRC1 |
| | 5SL–2173L–50 | .GRAPHIC SET 1 | 1 | 1 | | | | UR FOR DPBMC |
| 7 | 90110–05201 | BOLT, HEXAGON SOCKET HEAD | 1 | 1 | | | | |
| 8 | 90183–05076 | NUT, SPRING | 1 | 1 | | | | |
| 9 | 90269–07076 | RIVET | 2 | 2 | | | | |
| 10 | 90269–07010 | RIVET | 6 | 6 | | | | |
| 11 | 5SL–21871–00 | TANK, RECOVERY | 1 | 1 | | | | |
| 12 | 4NK–21875–00 | CAP | 1 | 1 | | | | |
| 13 | 26H–21828–00 | ELBOW | 1 | 1 | | | | |
| 14 | 90445–08376 | HOSE (L330) | 1 | 1 | | | | |
| 15 | 90467–08003 | CLIP | 1 | 1 | | | | |
| 16 | 5SL–2172W–00 | COVER | 1 | 1 | | | | |
| 17 | 90111–05002 | BOLT | 2 | 2 | | | | |
| 18 | 90183–050A0 | NUT, SPRING | 2 | 2 | | | | |
| 19 | 5SL–21746–00 | DAMPER | 1 | 1 | | | | |
| 20 | 90119–06059 | BOLT, WITH WASHER | 2 | 2 | | | | |

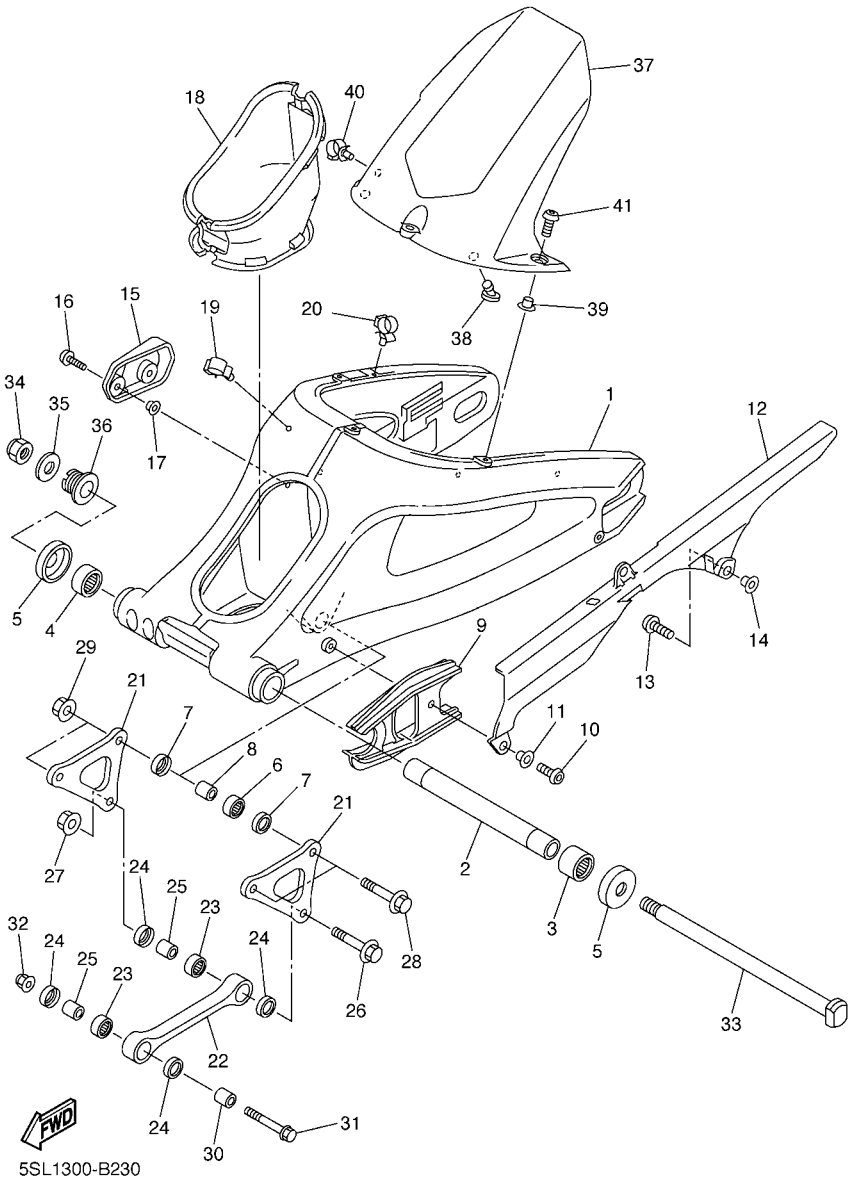


## FIG. 23 REAR ARM

| REF. NO. | PART NO. | DESCRIPTION | 5SLM | 5SLP | | | | REMARKS |
|---|---|---|---|---|---|---|---|---|
| 1 | 5SL–22110–01 | REAR ARM COMP. | 1 | 1 | | | | |
| 2 | 5EB–22184–00 | BUSH | 1 | 1 | | | | |
| 3 | 93317–42550 | BEARING | 1 | 1 | | | | |
| 4 | 93315–42536 | BEARING | 1 | 1 | | | | |
| 5 | 5JJ–22128–00 | COVER, THRUST 1 | 2 | 2 | | | | |
| 6 | 93315–41762 | BEARING | 1 | 1 | | | | |
| 7 | 93109–17071 | OIL SEAL | 2 | 2 | | | | |
| 8 | 90387–1012A | COLLAR | 1 | 1 | | | | |
| 9 | 5SL–22151–00 | SEAL, GUARD | 1 | 1 | | | | |
| 10 | 92017–06016 | BOLT, BUTTON HEAD | 1 | 1 | | | | |
| 11 | 90387–062X0 | COLLAR | 1 | 1 | | | | |
| 12 | 5SL–22311–00 | CASE, CHAIN | 1 | 1 | | | | |
| 13 | 90110–06102 | BOLT, HEXAGON SOCKET HEAD | 2 | 2 | | | | |
| 14 | 90387–06009 | COLLAR | 2 | 2 | | | | |
| 15 | 5SL–22381–00 | COVER 1 | 1 | 1 | | | | |
| 16 | 90111–06038 | BOLT | 2 | 2 | | | | |
| 17 | 90387–06681 | COLLAR | 2 | 2 | | | | |
| 18 | 5SL–2219X–00 | COVER | 1 | 1 | | | | |
| 19 | 90464–16012 | CLAMP | 1 | 1 | | | | |
| 20 | 90464–16011 | CLAMP | 1 | 1 | | | | |
| 21 | 5SL–2217A–10 | ARM, RELAY | 2 | 2 | | | | |
| 22 | 5SL–2217M–10 | ARM 1 | 1 | 1 | | | | |
| 23 | 93315–31758 | BEARING | 2 | 2 | | | | |
| 24 | 93109–17071 | OIL SEAL | 4 | 4 | | | | |
| 25 | 90387–1012A | COLLAR | 2 | 2 | | | | |
| 26 | 90105–10017 | BOLT, FLANGE | 1 | 1 | | | | |
| 27 | 95607–10200 | NUT, U FLANGE | 1 | 1 | | | | |

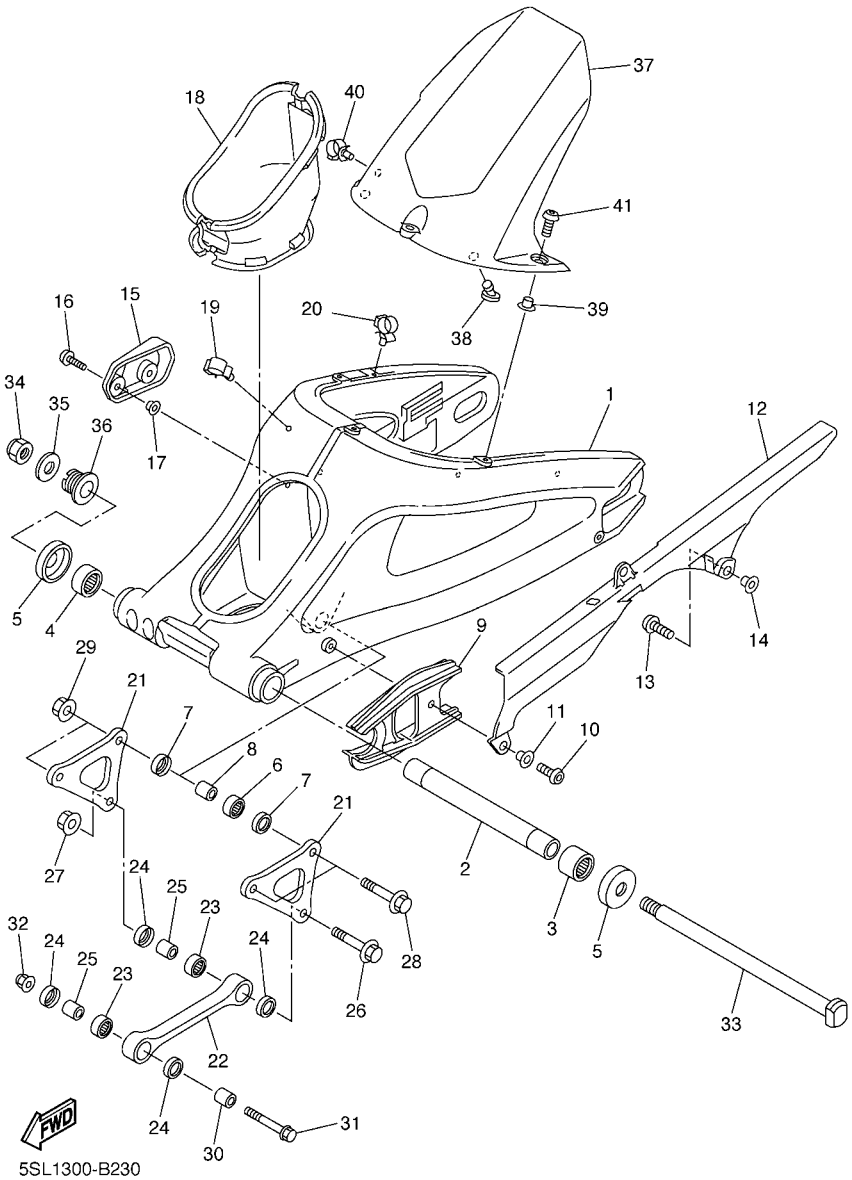


## FIG. 23 REAR ARM

| REF. NO. | PART NO. | DESCRIPTION | 5SLM | 5SLP | | | | REMARKS |
|---|---|---|---|---|---|---|---|---|
| 28 | 90105–10017 | BOLT, FLANGE | 2 | 2 | | | | |
| 29 | 95607–10200 | NUT, U FLANGE | 2 | 2 | | | | |
| 30 | 90387–1013U | COLLAR | 1 | 1 | | | | |
| 31 | 90105–10018 | BOLT, FLANGE | 1 | 1 | | | | |
| 32 | 95607–10200 | NUT, U FLANGE | 1 | 1 | | | | |
| 33 | 4FN–22141–00 | SHAFT, PIVOT | 1 | 1 | | | | |
| 34 | 90185–18104 | NUT, SELF-LOCKING | 1 | 1 | | | | |
| 35 | 90201–186M4 | WASHER, PLATE | 1 | 1 | | | | |
| 36 | 5PW–22125–00 | BOLT | 1 | 1 | | | | |
| 37 | 5SL–21650–00 | REAR FENDER COMP. | 1 | 1 | | | | |
| 38 | 5SL–21639–00 | DAMPER 2 | 2 | 2 | | | | |
| 39 | 90387–07717 | COLLAR | 3 | 3 | | | | |
| 40 | 90464–16012 | CLAMP | 1 | 1 | | | | |
| 41 | 90111–06038 | BOLT | 3 | 3 | | | | |

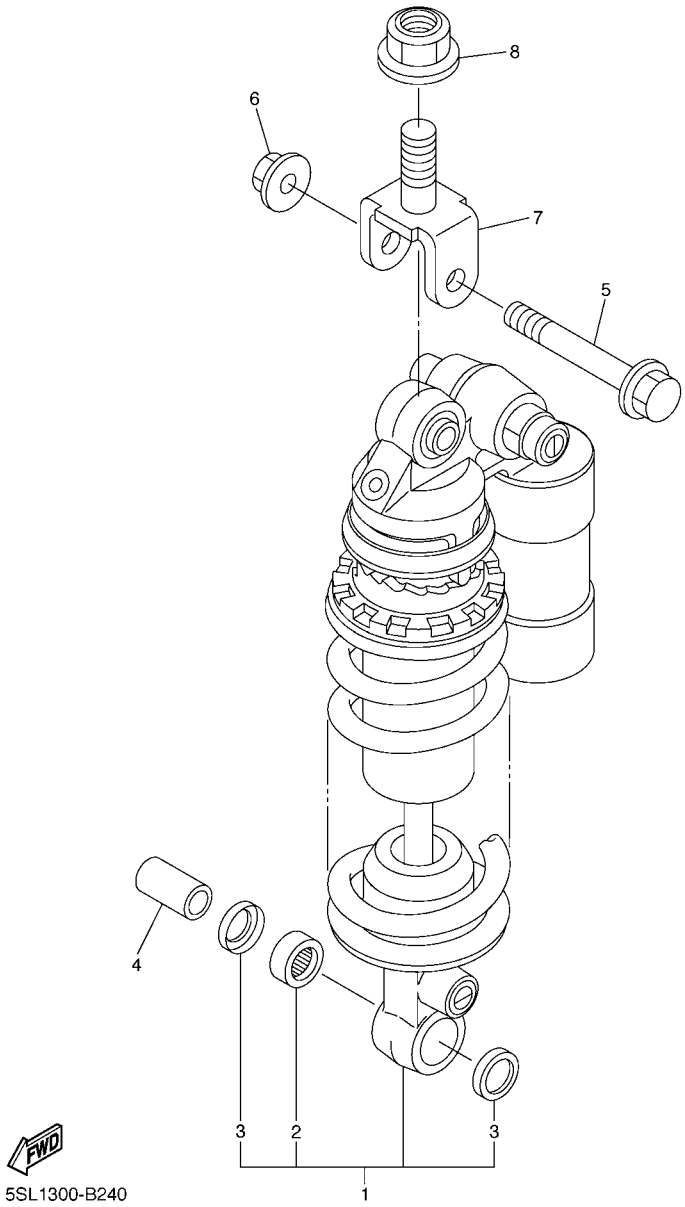


## FIG. 24 REAR SUSPENSION

| REF. NO. | PART NO. | DESCRIPTION | 5SLM | 5SLP | | | | REMARKS |
|---|---|---|---|---|---|---|---|---|
| 1 | 5SL–22210–30 | SHOCK ABSORBER ASSY, REAR | 1 | 1 | | | | |
| 2 | 93315–31758 | .BEARING | 1 | 1 | | | | |
| 3 | 93109–17071 | .OIL SEAL | 2 | 2 | | | | |
| 4 | 90387–1012A | COLLAR | 1 | 1 | | | | |
| 5 | 90105–10017 | BOLT, FLANGE | 1 | 1 | | | | |
| 6 | 95607–10200 | NUT, U FLANGE | 1 | 1 | | | | |
| 7 | 5SL–22219–00 | BRACKET, UPPER | 1 | 1 | | | | |
| 8 | 95607–14200 | NUT, SELF-LOCKING | 1 | 1 | | | | |

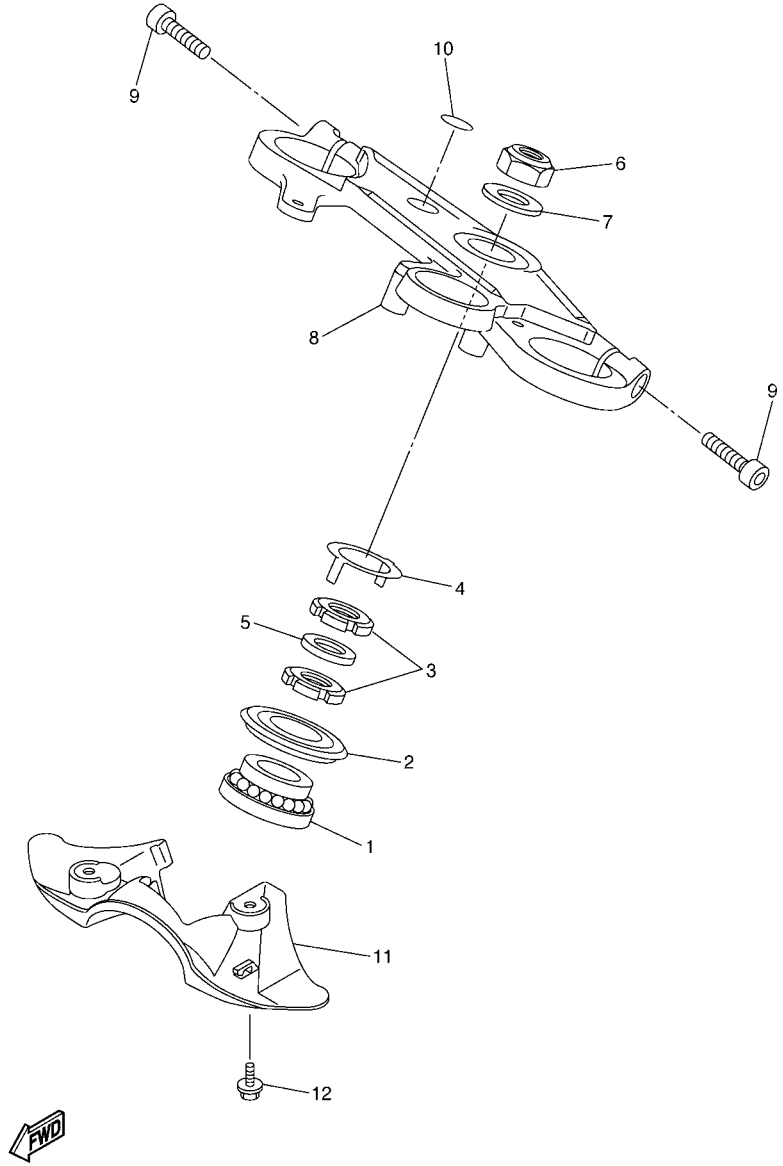


5SLM300-D250

## FIG. 25 STEERING

| REF. NO. | PART NO. | DESCRIPTION | 5SLM | 5SLP | | | | REMARKS |
|---|---|---|---|---|---|---|---|---|
| 1 | 93399–99955 | BEARING | 1 | 1 | | | | |
| 2 | 4XV–23415–01 | COVER, BALL RACE 1 | 1 | 1 | | | | |
| 3 | 90179–30691 | NUT | 2 | 2 | | | | |
| 4 | 4XV–23418–00 | WASHER, SPECIAL | 1 | 1 | | | | |
| 5 | 90202–30235 | WASHER, PLATE | 1 | 1 | | | | |
| 6 | 90170–28419 | NUT | 1 | 1 | | | | |
| 7 | 90201–281U8 | WASHER, PLATE | 1 | 1 | | | | |
| 8 | 5SL–23435–20 | CROWN, HANDLE | 1 | 1 | | | | |
| 9 | 91314–08030 | BOLT | 2 | 2 | | | | |
| 10 | 4XV–2341B–00 | EMBLEM | 1 | 1 | | | | |
| 11 | 5SL–23818–10 | COVER, STEERING | 1 | 1 | | | | |
| 12 | 90119–06117 | BOLT, WITH WASHER | 2 | 2 | | | | |

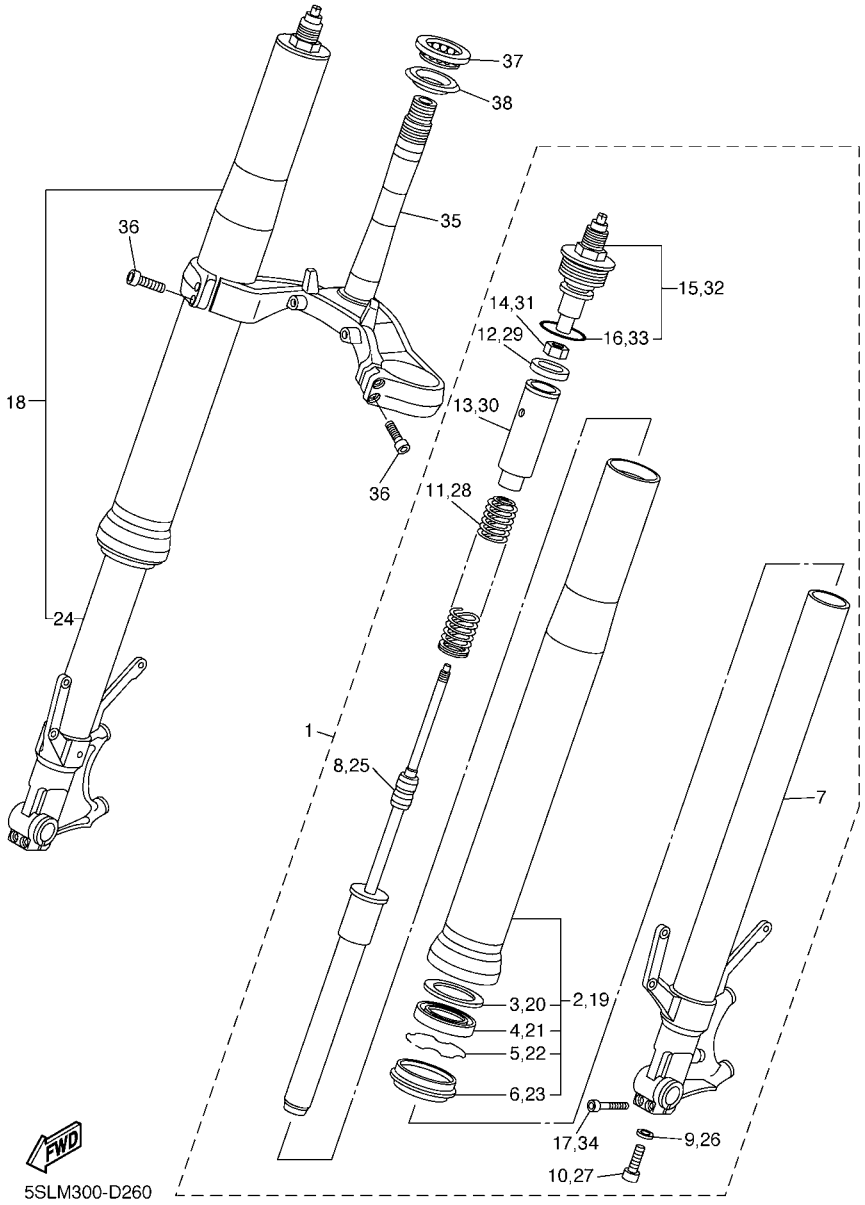


## FIG. 26 FRONT FORK

| REF. NO. | PART NO. | DESCRIPTION | 5SLM | 5SLP | | | | REMARKS |
|---|---|---|---|---|---|---|---|---|
| 1 | 5SL–23102–20 | FRONT FORK ASSY (L.H) | 1 | 1 | | | | |
| 2 | 5SL–23136–21 | .TUBE, OUTER (RIGHT) | 1 | 1 | | | | |
| 3 | 5JJ–23146–00 | ..WASHER, OIL SEAL | 1 | 1 | | | | |
| 4 | 4XV–23145–00 | ..OIL SEAL | 1 | 1 | | | | |
| 5 | 26H–23156–00 | ..CLIP, OIL SEAL | 1 | 1 | | | | |
| 6 | 4EB–23144–00 | ..SEAL, DUST | 1 | 1 | | | | |
| 7 | 5SL–23110–20 | .INNER TUBE COMP.1 | 1 | 1 | | | | |
| 8 | 5SL–23170–20 | .CYLINDER COMP., FRONT FORK | 1 | 1 | | | | |
| 9 | 509–23158–L0 | .GASKET | 1 | 1 | | | | |
| 10 | 5UX–23181–00 | .BOLT, HEXAGON SOCKET HEAD | 1 | 1 | | | | |
| 11 | 5SL–23141–20 | .SPRING, FRONT FORK | 1 | 1 | | | | |
| 12 | 5VY–12277–00 | .WASHER | 1 | 1 | | | | |
| 13 | 5VY–23118–00 | .SPACER | 1 | 1 | | | | |
| 14 | 3LC–23357–00 | .NUT | 1 | 1 | | | | |
| 15 | 5SL–23111–21 | .BOLT, CAP | 1 | 1 | | | | |
| 16 | 3XJ–23147–L0 | ..O-RING | 1 | 1 | | | | |
| 17 | 91314–08040 | .BOLT | 2 | 2 | | | | |
| 18 | 5SL–23103–20 | FRONT FORK ASSY (R.H) | 1 | 1 | | | | |
| 19 | 5SL–23136–21 | .TUBE, OUTER (RIGHT) | 1 | 1 | | | | |
| 20 | 5JJ–23146–00 | ..WASHER, OIL SEAL | 1 | 1 | | | | |
| 21 | 4XV–23145–00 | ..OIL SEAL | 1 | 1 | | | | |
| 22 | 26H–23156–00 | ..CLIP, OIL SEAL | 1 | 1 | | | | |
| 23 | 4EB–23144–00 | ..SEAL, DUST | 1 | 1 | | | | |
| 24 | 5SL–23120–20 | .INNER TUBE COMP.2 | 1 | 1 | | | | |
| 25 | 5SL–23170–20 | .CYLINDER COMP., FRONT FORK | 1 | 1 | | | | |
| 26 | 509–23158–L0 | .GASKET | 1 | 1 | | | | |
| 27 | 5UX–23181–00 | .BOLT, HEXAGON SOCKET HEAD | 1 | 1 | | | | |

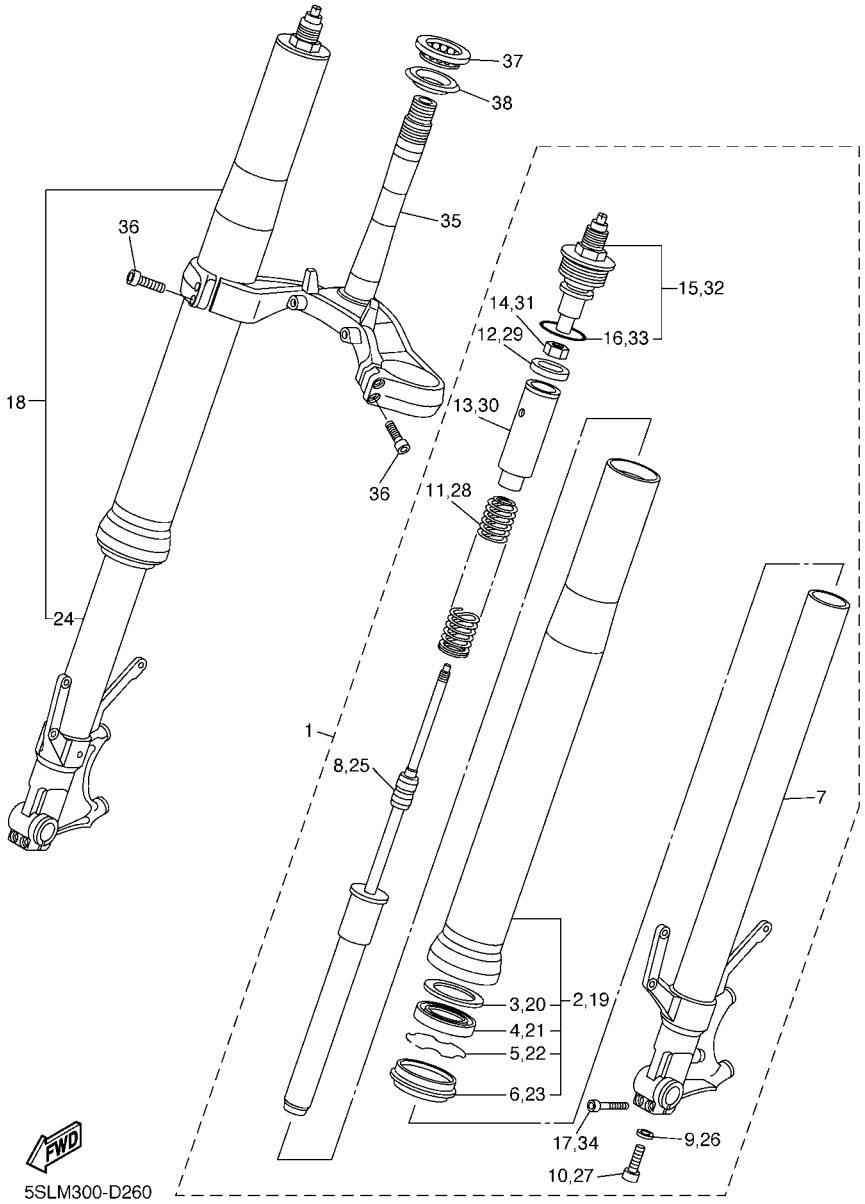


## FIG. 26 FRONT FORK

| REF. NO. | PART NO. | DESCRIPTION | 5SLM | 5SLP | | | | REMARKS |
|---|---|---|---|---|---|---|---|---|
| 28 | 5SL–23141–20 | .SPRING, FRONT FORK | 1 | 1 | | | | |
| 29 | 5VY–12277–00 | .WASHER | 1 | 1 | | | | |
| 30 | 5VY–23118–00 | .SPACER | 1 | 1 | | | | |
| 31 | 3LC–23357–00 | .NUT | 1 | 1 | | | | |
| 32 | 5SL–23111–21 | .BOLT, CAP | 1 | 1 | | | | |
| 33 | 3XJ–23147–L0 | ..O-RING | 1 | 1 | | | | |
| 34 | 91314–08040 | .BOLT | 2 | 2 | | | | |
| 35 | 5SL–23340–20 | UNDER BRACKET COMP. | 1 | 1 | | | | |
| 36 | 91314–08030 | BOLT | 4 | 4 | | | | |
| 37 | 93399–99932 | BEARING | 1 | 1 | | | | |
| 38 | 3FV–23462–00 | SEAL, STEERING | 1 | 1 | | | | |

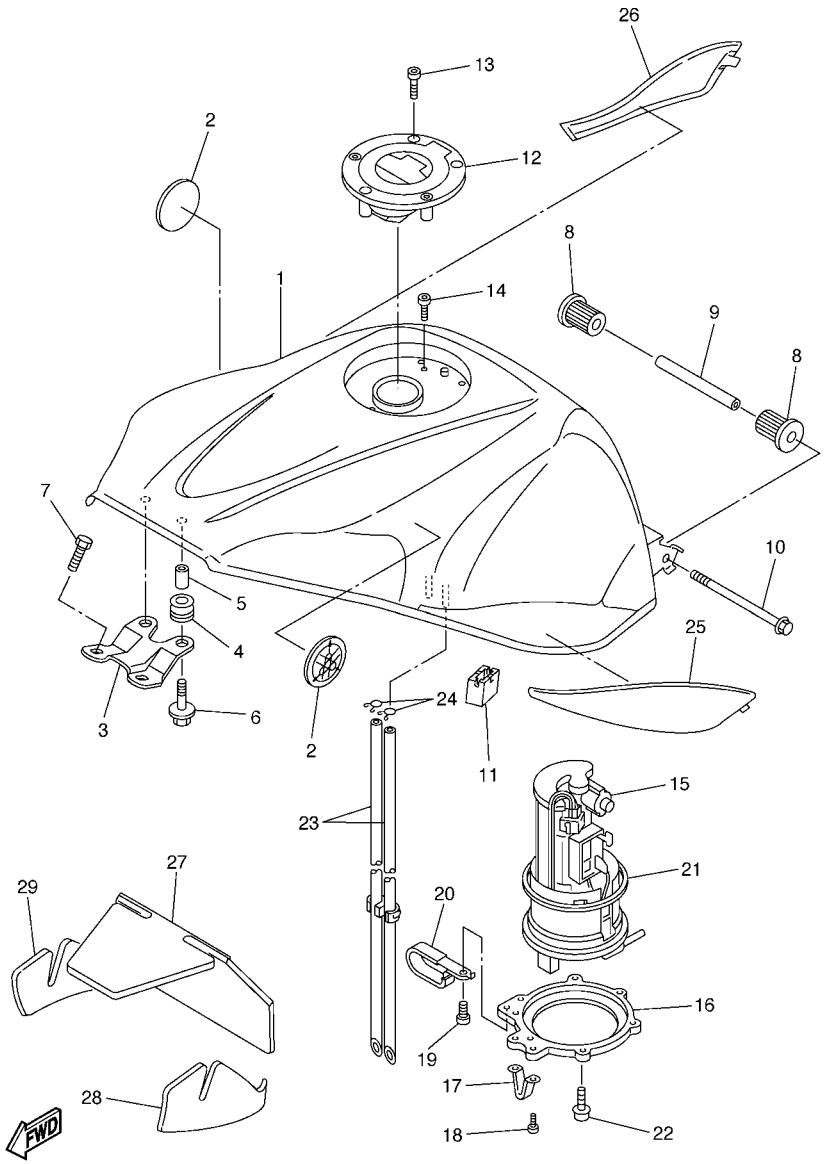

5SLM300-D270

## FIG. 27 FUEL TANK

| REF. NO. | PART NO. | DESCRIPTION | 5SLM | 5SLP | | | | REMARKS |
|---|---|---|---|---|---|---|---|---|
| 1 | 5SL–YK241–30–P0 | FUEL TANK COMP. | 1 | 1 | | | | UR VRC1 |
| | 5SL–YK241–30–P2 | FUEL TANK COMP. | 1 | 1 | | | | UR DPBMC |
| | 5SL–YK241–30–P5 | FUEL TANK COMP. | 1 | 1 | | | | UR SMX |
| 2 | 5SL–2413B–00 | EMBLEM | 2 | 2 | | | | |
| 3 | 5SL–24191–00 | BRACKET, FUEL TANK 1 | 1 | 1 | | | | |
| 4 | 90480–15483 | GROMMET | 2 | 2 | | | | |
| 5 | 90387–06054 | COLLAR | 2 | 2 | | | | |
| 6 | 90119–06062 | BOLT, WITH WASHER | 2 | 2 | | | | |
| 7 | 90110–06079 | BOLT, HEXAGON SOCKET HEAD | 2 | 2 | | | | |
| 8 | 5SL–24183–00 | DAMPER, LOCATING 3 | 2 | 2 | | | | |
| 9 | 90387–06055 | COLLAR | 1 | 1 | | | | |
| 10 | 95827–06090 | BOLT, FLANGE | 1 | 1 | | | | |
| 11 | 5SL–24182–00 | DAMPER, LOCATING 2 | 2 | 2 | | | | |
| 12 | 5JJ–24602–00 | CAP ASSY | 1 | 1 | | | | |
| 13 | 90110–05112 | BOLT, HEXAGON SOCKET HEAD | 3 | 3 | | | | |
| 14 | 91317–05010 | BOLT | 1 | 1 | | | | |
| 15 | 5PW–13907–01 | FUEL PUMP COMP. | 1 | 1 | | | | |
| 16 | 5SL–24491–10 | BRACKET, FUEL PUMP | 1 | 1 | | | | |
| 17 | 5PW–24192–00 | BRACKET, FUEL TANK 2 | 1 | 1 | | | | |
| 18 | 98907–05008 | SCREW, BIND | 2 | 2 | | | | |
| 19 | 90154–05012 | SCREW, BINDING | 1 | 1 | | | | |
| 20 | 90461–10009 | CLAMP | 1 | 1 | | | | |
| 21 | 5JW–24486–00 | O-RING | 1 | 1 | | | | |
| 22 | 90110–05014 | BOLT, HEXAGON SOCKET HEAD | 6 | 6 | | | | |
| 23 | 5SL–22906–00 | HOSE ASSY 1 | 1 | 1 | | | | |
| 24 | 90467–10008 | CLIP | 2 | 2 | | | | |
| 25 | 5SL–24129–00 | COVER, SIDE 1 | 1 | 1 | | | | |

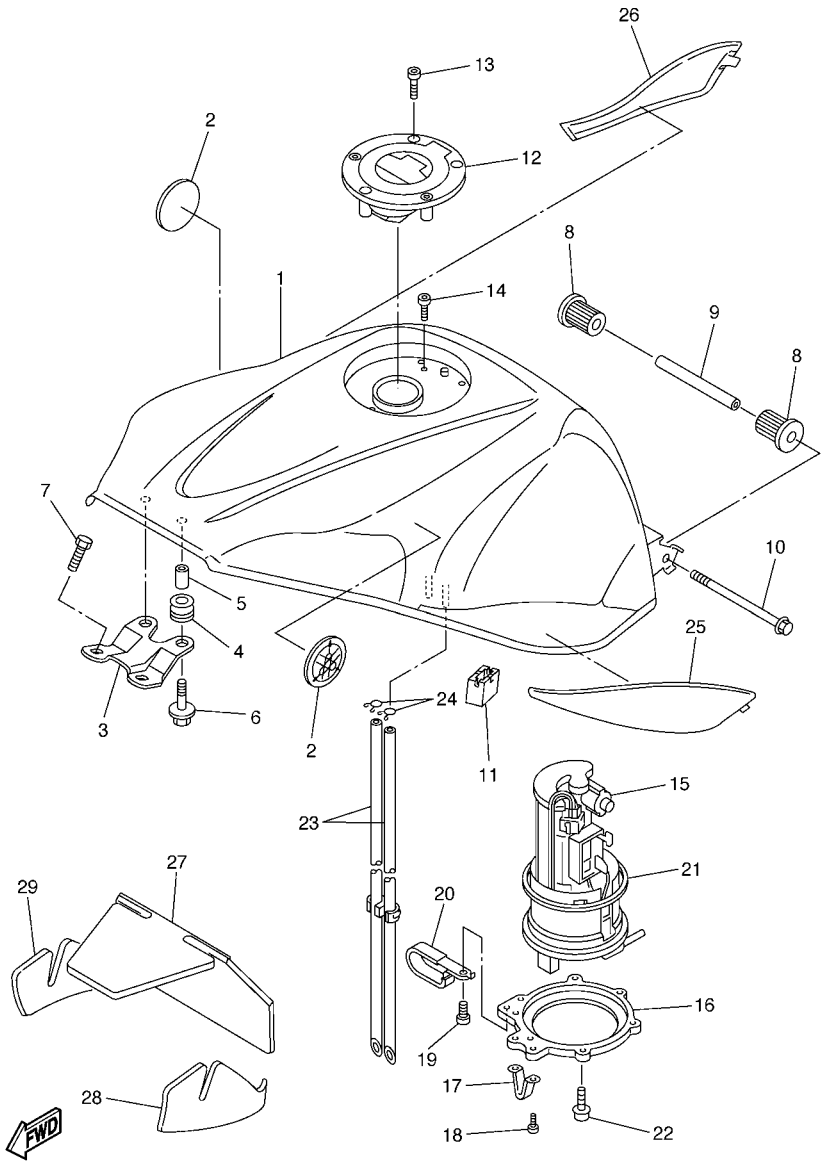

5SLM300-D270

## FIG. 27 FUEL TANK

| REF. NO. | PART NO. | DESCRIPTION | 5SLM | 5SLP | | | | REMARKS |
|---|---|---|---|---|---|---|---|---|
| 26 | 5SL–24139–00 | COVER, SIDE 2 | 1 | 1 | | | | |
| 27 | 5SL–2414H–00 | DAMPER, PLATE 1 | 1 | 1 | | | | |
| 28 | 5SL–2414J–00 | DAMPER, PLATE 2 | 1 | 1 | | | | |
| 29 | 5SL–2414K–00 | DAMPER, PLATE 3 | 1 | 1 | | | | |

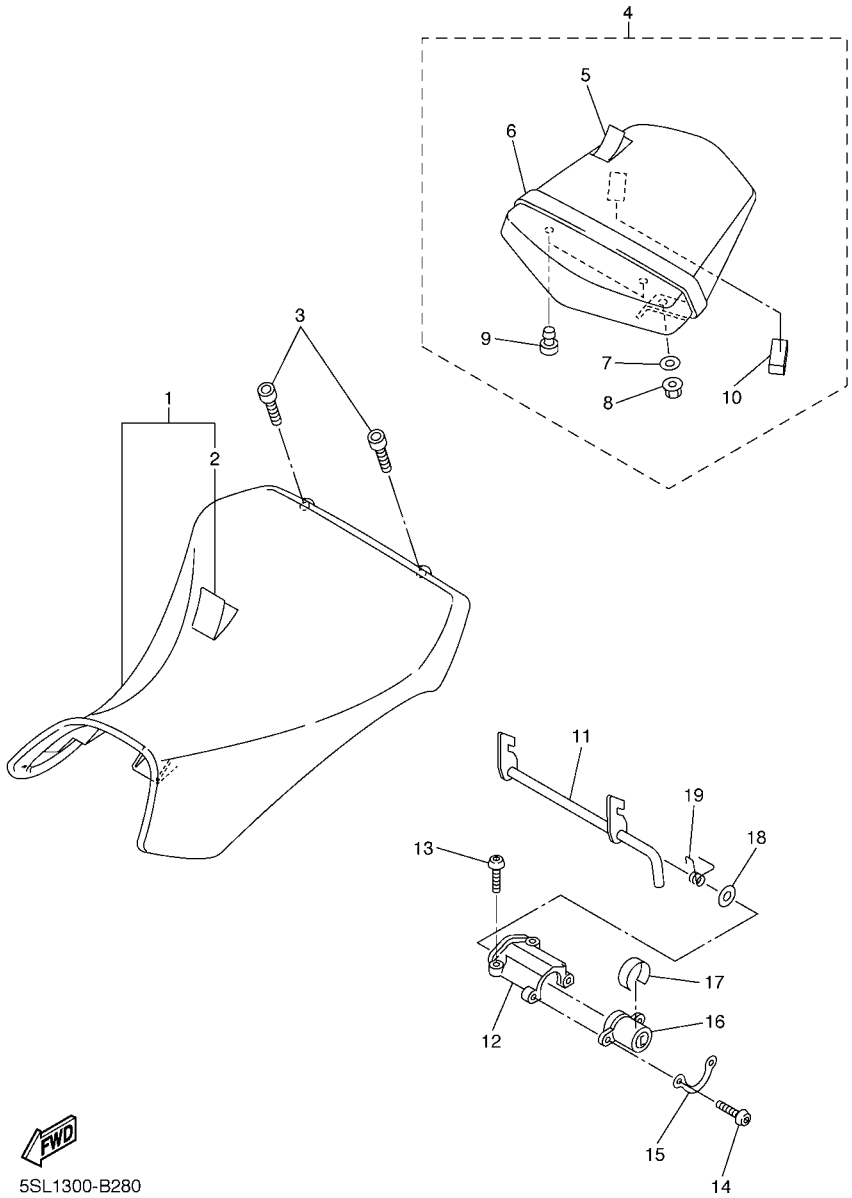


## FIG. 28 SEAT

| REF. NO. | PART NO. | DESCRIPTION | 5SLM | 5SLP | | | | REMARKS |
|---|---|---|---|---|---|---|---|---|
| 1 | 5SL–24710–00 | SINGLE SEAT ASSY | 1 | 1 | | | | |
| 2 | 5SL–2470F–00 | .SEAT COVER COMP. | 1 | 1 | | | | |
| 3 | 90110–06258 | BOLT, HEXAGON SOCKET HEAD | 2 | 2 | | | | |
| 4 | 5SL–24750–00 | TANDEM SEAT ASSY | 1 | 1 | | | | |
| 5 | 5SL–24751–00 | .COVER, TANDEM SEAT | 1 | 1 | | | | |
| 6 | 5SL–24720–00 | .SEAT BAND ASSY | 1 | 1 | | | | |
| 7 | 90201–06008 | .WASHER, PLATE | 2 | 2 | | | | |
| 8 | 95607–06200 | .NUT, SELF U-FLANGE | 2 | 2 | | | | |
| 9 | 5SL–24723–00 | .DAMPER, SEAT | 2 | 2 | | | | |
| 10 | 5SL–24724–00 | .DAMPER, SEAT | 1 | 1 | | | | |
| 11 | 5SL–24780–00 | SEAT LOCK ASSY | 1 | 1 | | | | |
| 12 | 5SL–24792–00 | PLATE | 1 | 1 | | | | |
| 13 | 92017–06025 | BOLT, BUTTON HEAD | 2 | 2 | | | | |
| 14 | 92017–06014 | BOLT, BUTTON HEAD | 2 | 2 | | | | |
| 15 | 5SL–2479R–00 | PLATE, COVER | 1 | 1 | | | | |
| 16 | 5SL–W2470–00 | SEAT LOCK ASSY | 1 | 1 | | | | |
| 17 | 5SL–24858–00 | SEAL | 1 | 1 | | | | |
| 18 | 90202–08001 | WASHER, PLATE | 2 | 2 | | | | |
| 19 | 5SL–24758–00 | SPRING | 1 | 1 | | | | |

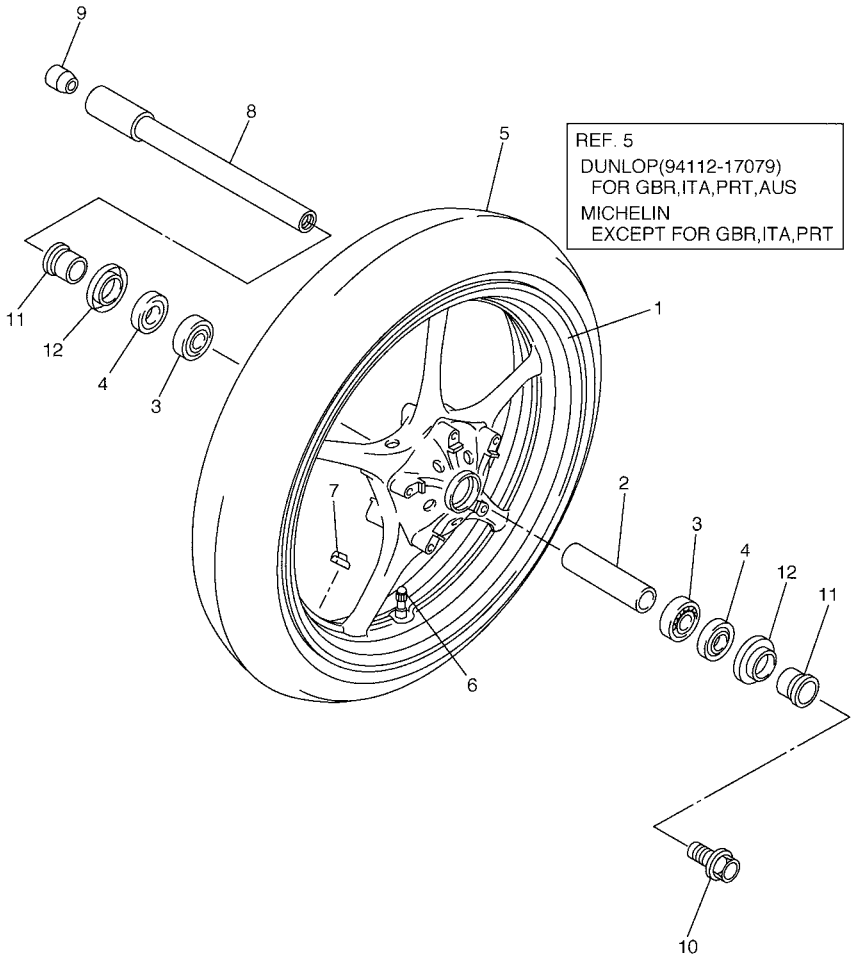

5SLM300-D290

## FIG. 29 FRONT WHEEL

| REF. NO. | PART NO. | DESCRIPTION | 5SLM | 5SLP | | | | REMARKS |
|---|---|---|---|---|---|---|---|---|
| 1 | 5SL–25168–00–98 | CAST WHEEL, FRONT | 1 | 1 | | | | FOR VRC1,DPBMC |
| | 5SL–25168–00–0X | CAST WHEEL, FRONT | 1 | 1 | | | | FOR SMX |
| 2 | 4XV–25117–00 | SPACER, BEARING | 1 | 1 | | | | |
| 3 | 93306–00420 | BEARING (B6004) | 2 | 2 | | | | |
| 4 | 93106–28043 | OIL SEAL | 2 | 2 | | | | |
| 5 | 94112–17079 | TIRE(120/70ZR17 M/C 58W D218F) | 1 | 1 | | | | UR DUNLOP |
| | * | TIRE(120/70 ZR17M/C 58W PILOT) | 1 | | | | | UR LM MICHELIN |
| 6 | 93900–00030 | VALVE, RIM (TR412) | 1 | 1 | | | | TAIHEIYO |
| 7 | 5MT–25398–00 | BALANCER, WHEEL (10G) | 1 | 1 | | | | UR |
| | 5MT–25398–10 | BALANCER, WHEEL (20G) | 1 | 1 | | | | UR |
| | 5MT–25398–20 | BALANCER, WHEEL (30G) | 1 | 1 | | | | UR |
| 8 | 5PW–25181–00 | AXLE, WHEEL | 1 | 1 | | | | |
| 9 | 5PW–25188–00 | CAP | 1 | 1 | | | | |
| 10 | 90105–14002 | BOLT, FLANGE | 1 | 1 | | | | |
| 11 | 4XV–25186–00 | COLLAR, WHEEL | 2 | 2 | | | | |
| 12 | 4XV–25118–00 | COVER, HUB DUST | 2 | 2 | | | | |

## FIG. 30 FRONT BRAKE CALIPER

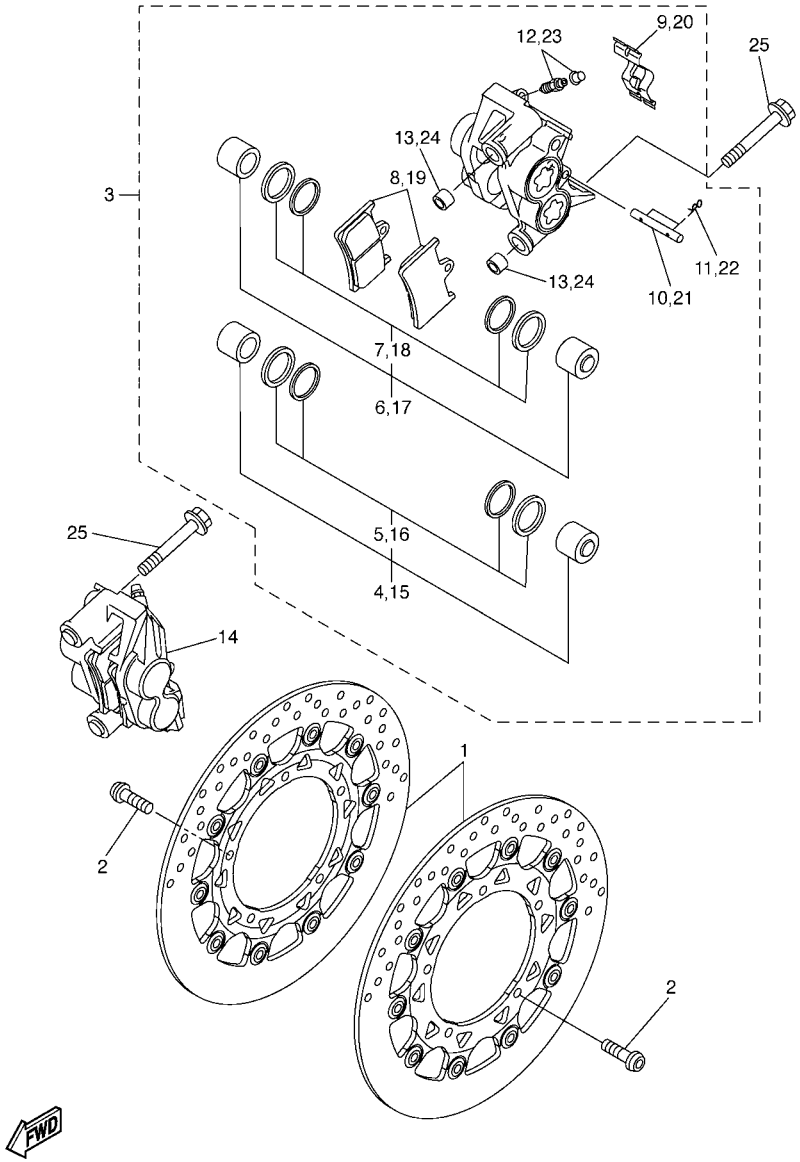


5SLM300-D300

| REF. NO. | PART NO. | DESCRIPTION | 5SLM | 5SLP | | | | REMARKS |
|---|---|---|---|---|---|---|---|---|
| 1 | 5SL–2581T–10 | DISK BRAKE ASSY | 2 | 2 | | | | |
| 2 | 90109–064G6 | BOLT | 10 | 10 | | | | |
| 3 | 5SL–2580T–10 | CALIPER ASSY (LEFT) | 1 | 1 | | | | |
| 4 | 5PW–W0057–10 | .PISTON ASSY, CALIPER | 1 | 1 | | | | |
| 5 | 5PW–W0047–10 | ..CALIPER SEAL KIT | 1 | 1 | | | | |
| 6 | 5PW–W0057–00 | .PISTON ASSY, CALIPER | 1 | 1 | | | | |
| 7 | 5PW–W0047–00 | ..CALIPER SEAL KIT | 1 | 1 | | | | |
| 8 | 5SL–W0045–10 | .BRAKE PAD KIT | 1 | 1 | | | | |
| 9 | 4SV–25919–00 | .SUPPORT, PAD | 1 | 1 | | | | |
| 10 | 4SV–25924–00 | .PIN, PAD | 1 | 1 | | | | |
| 11 | 3GM–25925–00 | .CLIP | 2 | 2 | | | | |
| 12 | 1J3–W0048–00 | .BLEED SCREW KIT | 1 | 1 | | | | |
| 13 | 5VY–2583B–00 | .PIN, KNOCK | 2 | 2 | | | | |
| 14 | 5SL–2580U–10 | CALIPER ASSY (RIGHT) | 1 | 1 | | | | |
| 15 | 5PW–W0057–10 | .PISTON ASSY, CALIPER | 1 | 1 | | | | |
| 16 | 5PW–W0047–10 | ..CALIPER SEAL KIT | 1 | 1 | | | | |
| 17 | 5PW–W0057–00 | .PISTON ASSY, CALIPER | 1 | 1 | | | | |
| 18 | 5PW–W0047–00 | ..CALIPER SEAL KIT | 1 | 1 | | | | |
| 19 | 5SL–W0045–10 | .BRAKE PAD KIT | 1 | 1 | | | | |
| 20 | 4SV–25919–00 | .SUPPORT, PAD | 1 | 1 | | | | |
| 21 | 4SV–25924–00 | .PIN, PAD | 1 | 1 | | | | |
| 22 | 3GM–25925–00 | .CLIP | 2 | 2 | | | | |
| 23 | 1J3–W0048–00 | .BLEED SCREW KIT | 1 | 1 | | | | |
| 24 | 5VY–2583B–00 | .PIN, KNOCK | 2 | 2 | | | | |
| 25 | 90401–10012 | BOLT, UNION | 4 | 4 | | | | |

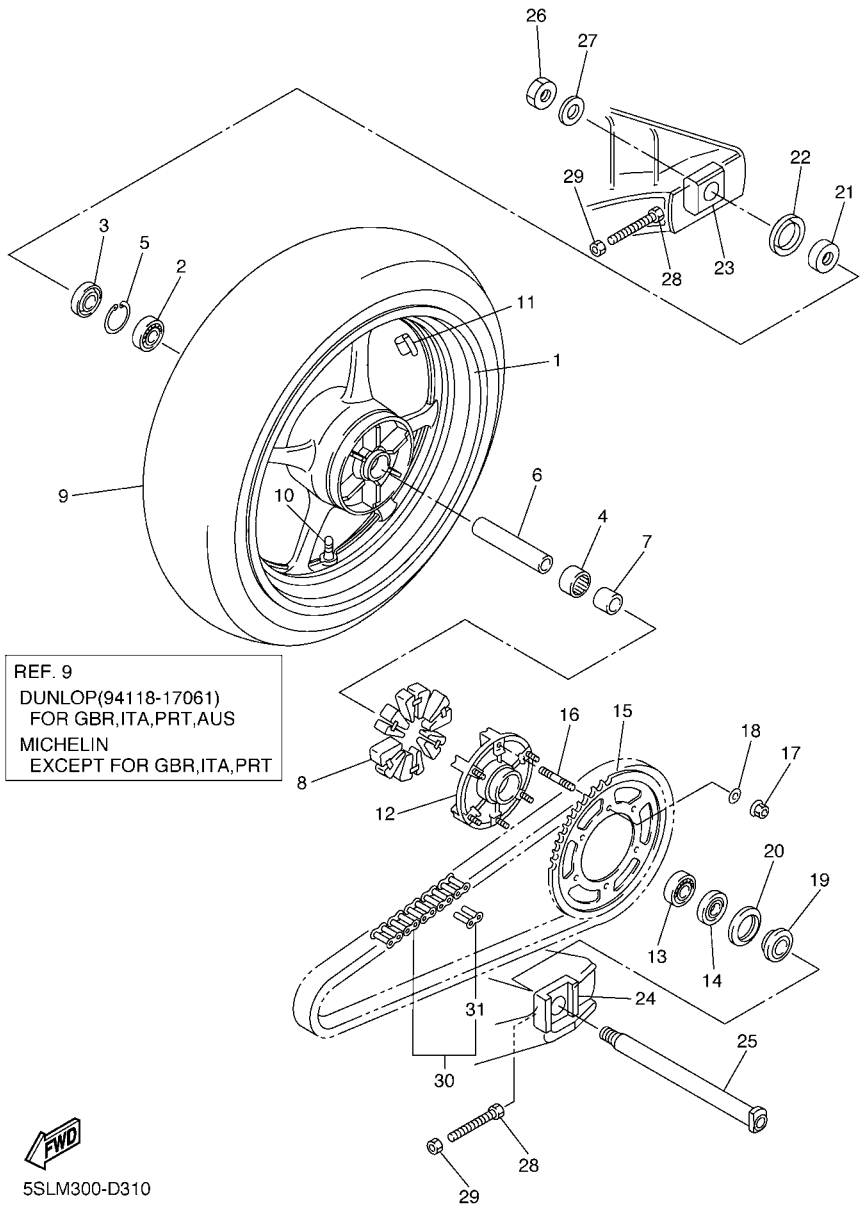


## FIG. 31 REAR WHEEL

| REF. NO. | PART NO. | DESCRIPTION | 5SLM | 5SLP | | | | REMARKS |
|---|---|---|---|---|---|---|---|---|
| 1 | 5SL–25338–00–98 | CAST WHEEL, REAR | 1 | 1 | | | | FOR VRC1,DPBMC |
| | 5SL–25338–00–0X | CAST WHEEL, REAR | 1 | 1 | | | | FOR SMX |
| 2 | 93306–20531 | BEARING | 1 | 1 | | | | |
| 3 | 93106–40013 | OIL SEAL | 1 | 1 | | | | |
| 4 | 93317–43580 | BEARING | 1 | 1 | | | | |
| 5 | 93420–61M07 | CIRCLIP | 1 | 1 | | | | |
| 6 | 4XV–25317–00 | SPACER, BEARING | 1 | 1 | | | | |
| 7 | 5SL–25383–00 | COLLAR, WHEEL | 1 | 1 | | | | |
| 8 | 5SL–25364–00 | DAMPER | 6 | 6 | | | | |
| 9 | 94118–17061 | TIRE (180/55ZR17 M/C 73W D218) | 1 | 1 | | | | UR DUNLOP |
| | * | TIRE(180/55 ZR17M/C 73W PILOT) | 1 | | | | | UR LM MICHELIN |
| 10 | 93900–00030 | VALVE, RIM (TR412) | 1 | 1 | | | | TAIHEIYO |
| 11 | 5MT–25398–00 | BALANCER, WHEEL (10G) | 1 | 1 | | | | UR |
| | 5MT–25398–10 | BALANCER, WHEEL (20G) | 1 | 1 | | | | UR |
| | 5MT–25398–20 | BALANCER, WHEEL (30G) | 1 | 1 | | | | UR |
| 12 | 5SL–25366–00 | CLUTCH, HUB | 1 | 1 | | | | |
| 13 | 93306–20531 | BEARING | 1 | 1 | | | | |
| 14 | 93106–40013 | OIL SEAL | 1 | 1 | | | | |
| 15 | 5SL–25448–20 | SPROCKET, DRIVEN (48T) | 1 | 1 | | | | |
| 16 | 90116–10485 | BOLT, STUD | 6 | 6 | | | | |
| 17 | 90185–10009 | NUT, SELF-LOCKING | 6 | 6 | | | | |
| 18 | 90201–10021 | WASHER, PLATE | 6 | 6 | | | | |
| 19 | 5SL–25376–00 | COLLAR, WHEEL | 1 | 1 | | | | |
| 20 | 5SL–25367–00 | COVER, HUB DUST | 1 | 1 | | | | |
| 21 | 4XV–25376–00 | COLLAR, WHEEL | 1 | 1 | | | | |
| 22 | 5SL–25327–00 | COVER, PLATE | 1 | 1 | | | | |
| 23 | 5SL–25388–00 | PULLER, CHAIN 1 | 1 | 1 | | | | |

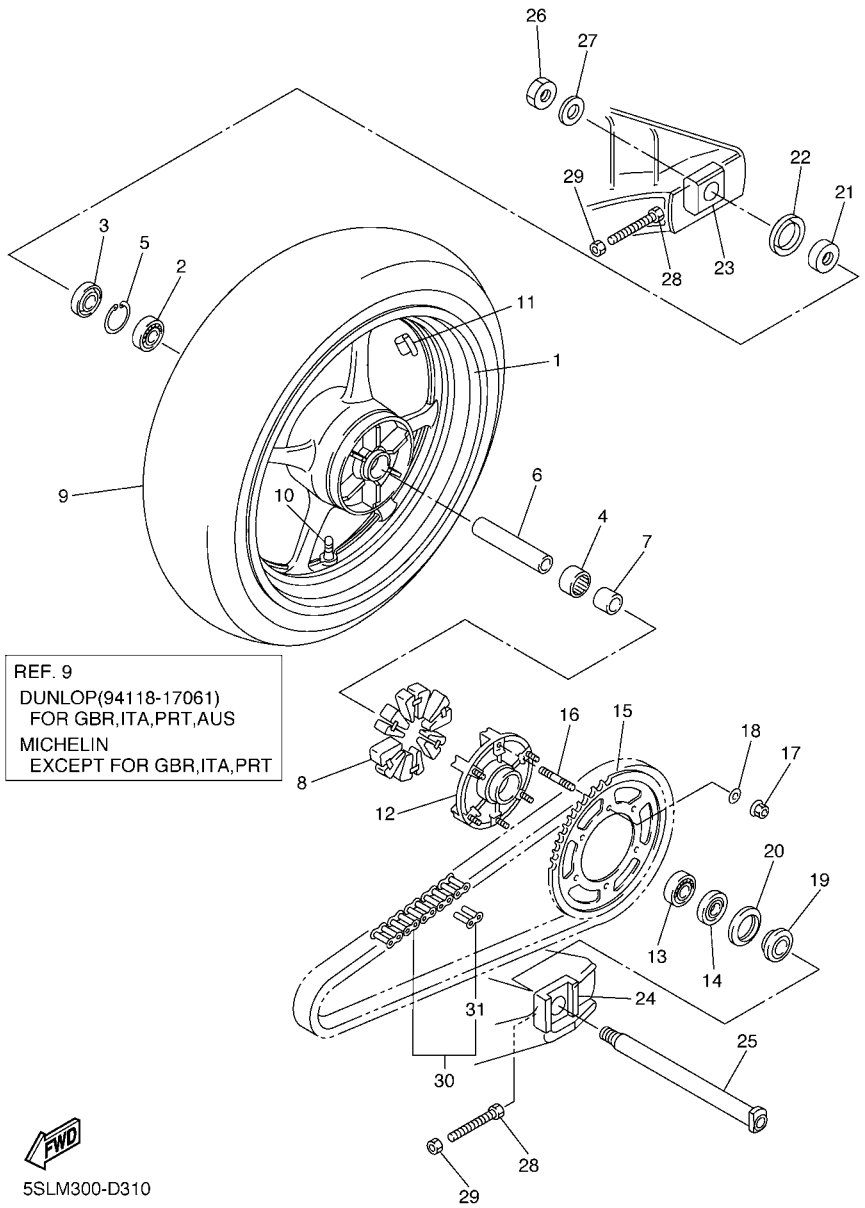


## FIG. 31 REAR WHEEL

| REF. NO. | PART NO. | DESCRIPTION | 5SLM | 5SLP | | | | REMARKS |
|---|---|---|---|---|---|---|---|---|
| 24 | 5SL–25389–00 | PULLER, CHAIN 2 | 1 | 1 | | | | |
| 25 | 5SL–25381–00 | AXLE, WHEEL | 1 | 1 | | | | |
| 26 | 90185–24165 | NUT, SELF-LOCKING | 1 | 1 | | | | |
| 27 | 90201–257R5 | WASHER, PLATE | 1 | 1 | | | | |
| 28 | 90101–08766 | BOLT | 2 | 2 | | | | |
| 29 | 95307–08600 | NUT | 2 | 2 | | | | |
| 30 | 9Y581–55115 | CHAIN (DID532ZLVKA1-L116) | 1 | 1 | | | | |
| 31 | 94681–55031 | .JOINT, CHAIN | 1 | 1 | | | | |

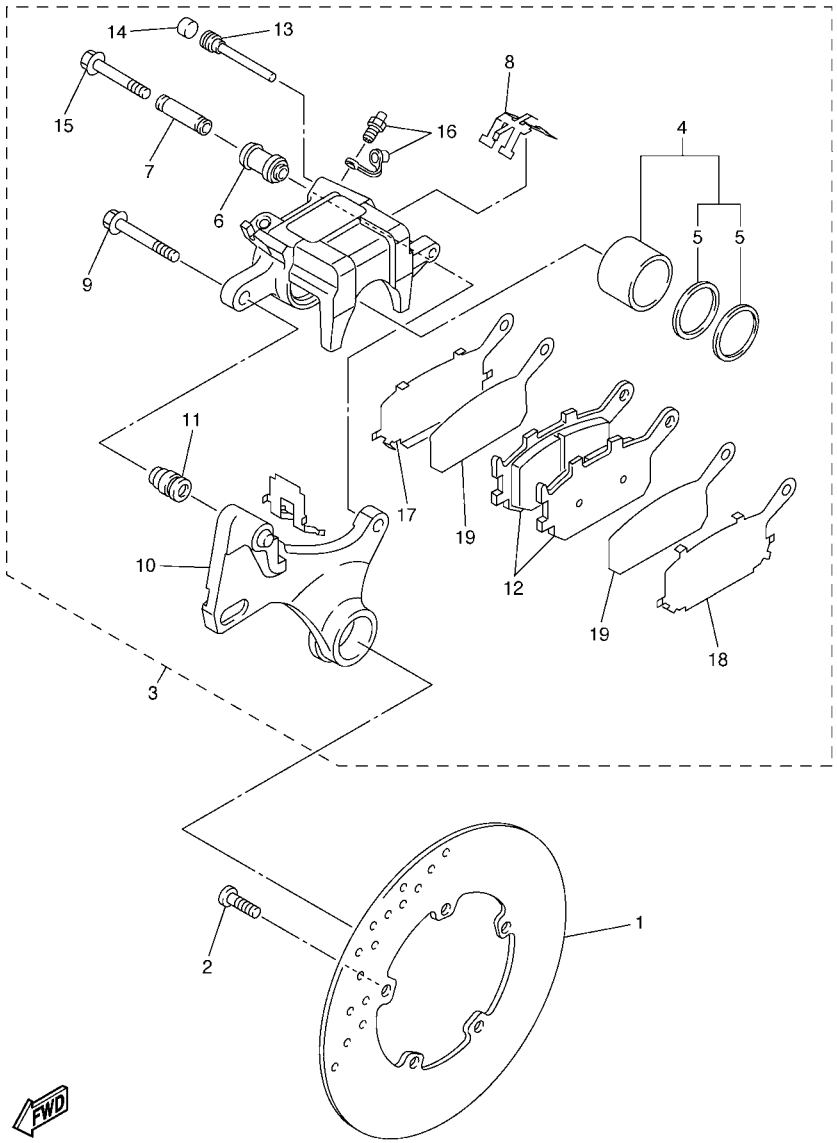


5SL1300-B320

## FIG. 32 REAR BRAKE CALIPER

| REF. NO. | PART NO. | DESCRIPTION | 5SLM | 5SLP | | | | REMARKS |
|---|---|---|---|---|---|---|---|---|
| 1 | 5SL–2582W–00 | DISK, REAR BRAKE 2 | 1 | 1 | | | | |
| 2 | 90109–08045 | BOLT | 5 | 5 | | | | |
| 3 | 5SL–2580W–00 | CALIPER ASSY, REAR 2 | 1 | 1 | | | | |
| 4 | 5SL–W0057–00 | .PISTON ASSY, CALIPER | 1 | 1 | | | | |
| 5 | 5SL–W0047–00 | ..CALIPER SEAL KIT | 1 | 1 | | | | |
| 6 | 5SL–25917–00 | .BOOT, CALIPER | 1 | 1 | | | | |
| 7 | 5SL–25838–00 | .SLEEVE, CALIPER | 1 | 1 | | | | |
| 8 | 5SL–25919–00 | .SUPPORT, PAD | 1 | 1 | | | | |
| 9 | 5SL–25914–00 | .PIN, SLIDE | 1 | 1 | | | | |
| 10 | 5SL–25921–00 | .BRACKET, SUPPORT | 1 | 1 | | | | |
| 11 | 3JD–25917–00 | .BOOT, CALIPER | 1 | 1 | | | | |
| 12 | 5SL–W0046–00 | .BRAKE PAD KIT 2 | 1 | 1 | | | | |
| 13 | 8CR–25924–00 | .PIN, PAD | 1 | 1 | | | | |
| 14 | 5DH–25916–00 | .PLUG | 1 | 1 | | | | |
| 15 | 5SL–25926–00 | .BOLT | 1 | 1 | | | | |
| 16 | 1UY–W0048–00 | .BLEED SCREW KIT | 1 | 1 | | | | |
| 17 | 5SL–25827–00 | .SHIM, CALIPER | 1 | 1 | | | | |
| 18 | 5SL–25827–10 | .SHIM, CALIPER | 1 | 1 | | | | |
| 19 | 5SL–25828–00 | .SHIM, CALIPER | 2 | 2 | | | | |

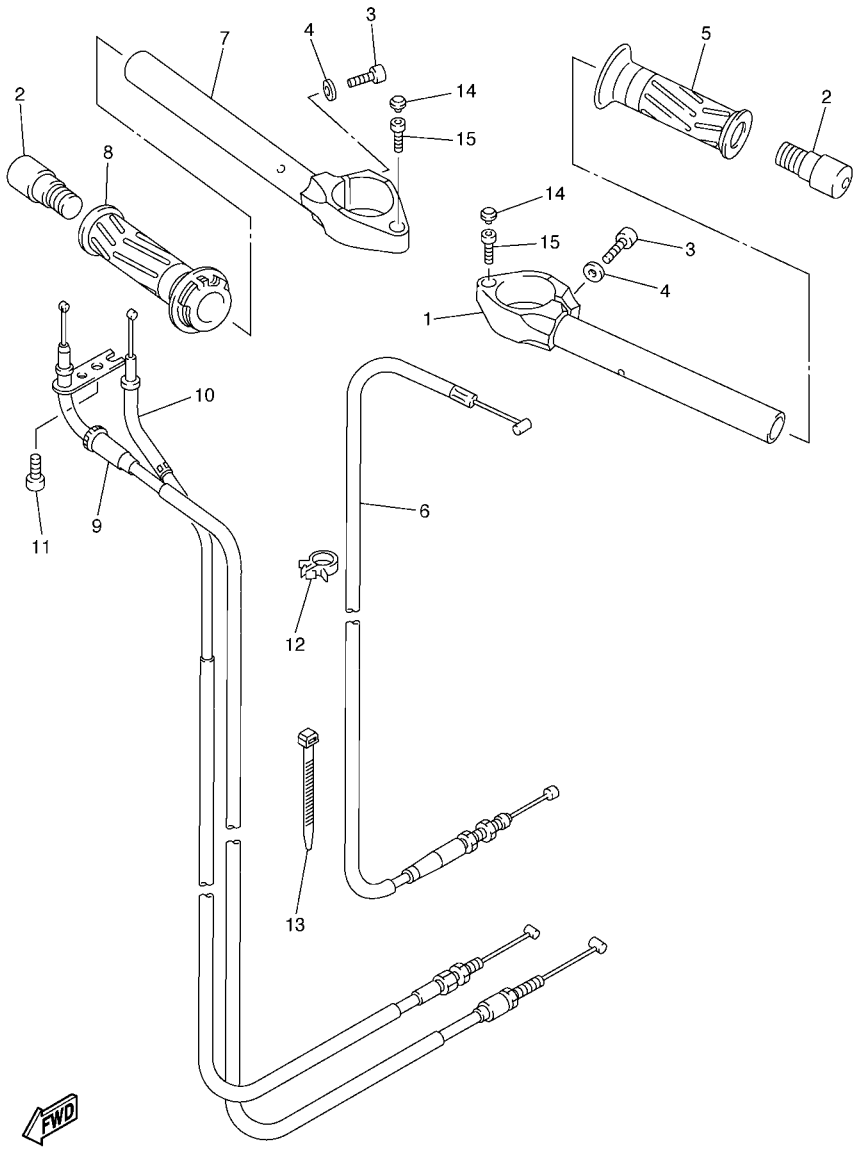

5SLM300-D330

## FIG. 33 STEERING HANDLE & CABLE

| REF. NO. | PART NO. | DESCRIPTION | 5SLM | 5SLP | | | | REMARKS |
|---|---|---|---|---|---|---|---|---|
| 1 | 5SL–26121–10 | HANDLEBAR (LEFT) | 1 | 1 | | | | |
| 2 | 5EB–26246–00 | END, GRIP | 2 | 2 | | | | |
| 3 | 91314–08030 | BOLT | 2 | 2 | | | | |
| 4 | 90201–086J0 | WASHER, PLATE | 2 | 2 | | | | |
| 5 | 4YR–26241–02 | GRIP (LEFT) | 1 | 1 | | | | |
| 6 | 5SL–26335–20 | CABLE, CLUTCH | 1 | 1 | | | | |
| 7 | 5SL–26122–10 | HANDLEBAR (RIGHT) | 1 | 1 | | | | |
| 8 | 5SL–26240–01 | GRIP ASSY | 1 | 1 | | | | |
| 9 | 5SL–26311–00 | CABLE, THROTTLE 1 | 1 | 1 | | | | |
| 10 | 5SL–26312–00 | CABLE, THROTTLE 2 | 1 | 1 | | | | |
| 11 | 91317–05014 | BOLT | 1 | 1 | | | | |
| 12 | 90464–15157 | CLAMP | 2 | 2 | | | | |
| 13 | 90464–15195 | CLAMP | 1 | 1 | | | | |
| 14 | 2H9–23469–00 | CAP, BOLT | 2 | 2 | | | | |
| 15 | 91317–06020 | BOLT | 2 | 2 | | | | |

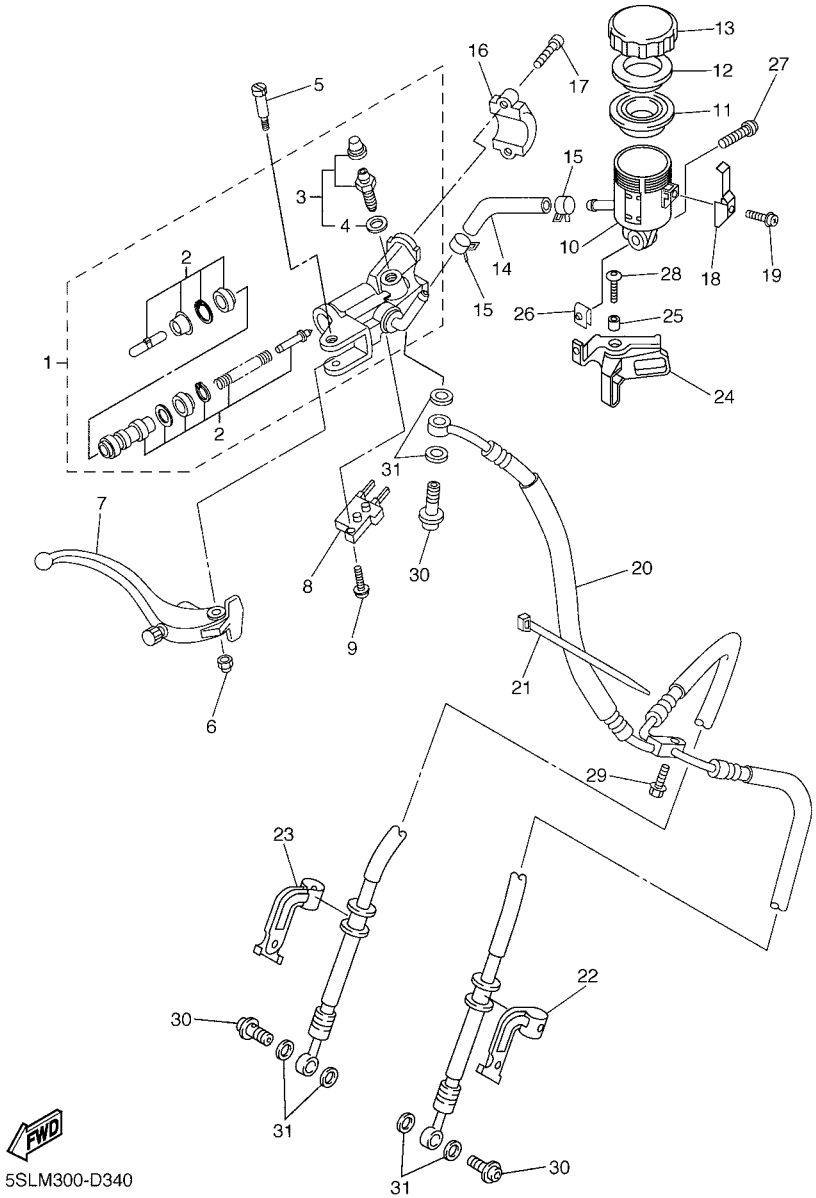


## FIG. 34 FRONT MASTER CYLINDER

| REF. NO. | PART NO. | DESCRIPTION | 5SLM | 5SLP | | | | REMARKS |
|---|---|---|---|---|---|---|---|---|
| 1 | 5SL–W2587–00 | MASTER CYLINDER SUB ASSY | 1 | 1 | | | | |
| 2 | 5VY–W0041–00 | .CYLINDER KIT, MASTER | 1 | 1 | | | | |
| 3 | 5VY–W0048–00 | .BLEED SCREW KIT | 1 | 1 | | | | |
| 4 | 5VY–25975–00 | ..SEAL 1 | 1 | 1 | | | | |
| 5 | 5VY–2589F–01 | BOLT, LEVER | 1 | 1 | | | | |
| 6 | 5VS–2586F–00 | NUT, COVER | 1 | 1 | | | | |
| 7 | 5SL–83922–10 | LEVER 2 | 1 | 1 | | | | |
| 8 | 4HM–83980–00 | FRONT STOP SWITCH ASSY | 1 | 1 | | | | |
| 9 | 5VS–2585H–00 | SCREW,SET | 1 | 1 | | | | |
| 10 | 5SL–25894–20 | TANK, RESERVOIR | 1 | 1 | | | | |
| 11 | 5VY–25854–00 | DIAPHRAGM, RESERVOIR | 1 | 1 | | | | |
| 12 | 5VY–25855–00 | BUSH,DIAPHRAGM | 1 | 1 | | | | |
| 13 | 5VY–25852–00 | CAP, RESERVOIR | 1 | 1 | | | | |
| 14 | 5SL–25895–20 | HOSE, RESERVOIR | 1 | 1 | | | | |
| 15 | 90467–120A3 | CLIP | 2 | 2 | | | | |
| 16 | 5VS–25867–00 | BRACKET, MASTER CYLINDER | 1 | 1 | | | | |
| 17 | 5VS–26332–00 | BOLT | 2 | 2 | | | | |
| 18 | 5VY–2589G–00 | HOLDER | 1 | 1 | | | | |
| 19 | 5VY–2589H–00 | SCREW | 1 | 1 | | | | |
| 20 | 5SL–25872–10 | HOSE, BRAKE 1 | 1 | 1 | | | | |
| 21 | 3MA–82591–00 | BAND | 1 | 1 | | | | |
| 22 | 5SL–25886–10 | HOLDER, BRAKE HOSE | 1 | 1 | | | | |
| 23 | 5SL–25887–10 | HOLDER, BRAKE HOSE | 1 | 1 | | | | |
| 24 | 5SL–26292–10 | STAY | 1 | 1 | | | | |
| 25 | 90387–06057 | COLLAR | 1 | 1 | | | | |
| 26 | 90183–050A0 | NUT, SPRING | 1 | 1 | | | | |
| 27 | 90149–05244 | SCREW | 1 | 1 | | | | |

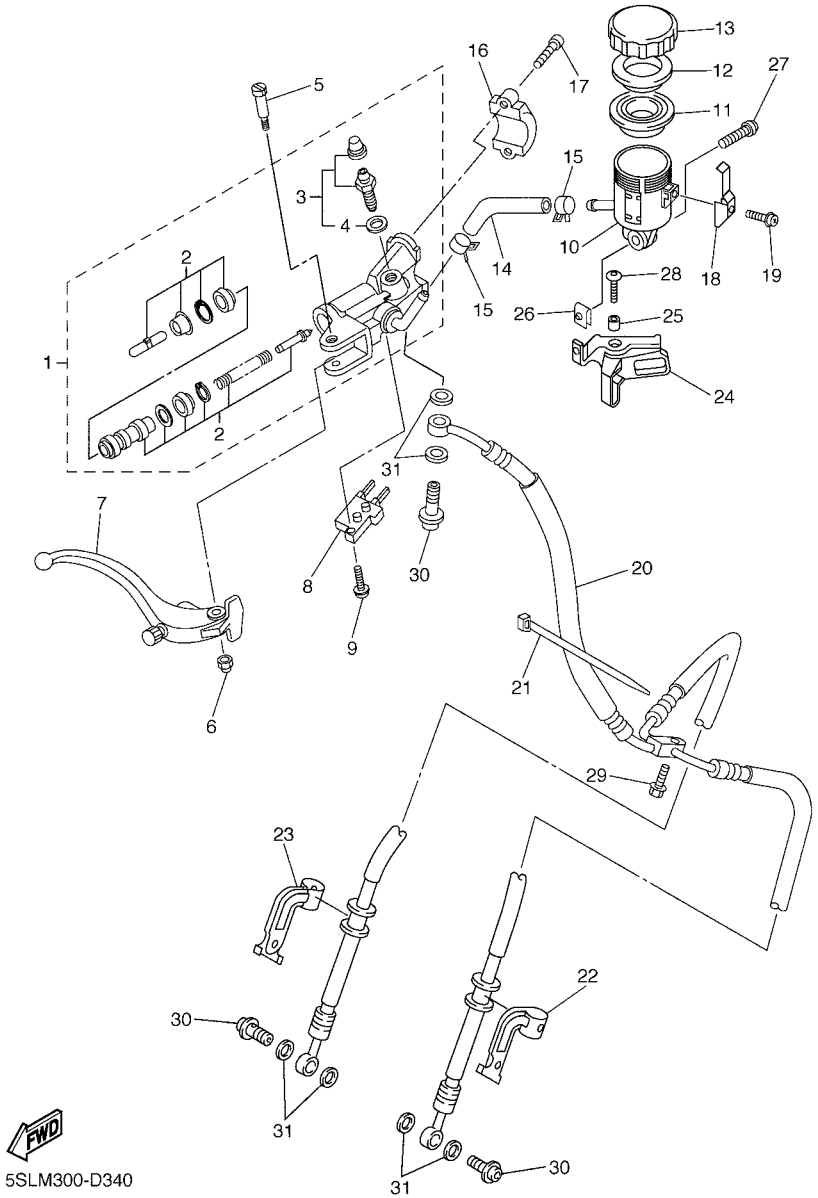


## FIG. 34 FRONT MASTER CYLINDER

| REF. NO. | PART NO. | DESCRIPTION | 5SLM | 5SLP | | | | REMARKS |
|---|---|---|---|---|---|---|---|---|
| 28 | 90111–06041 | BOLT | 1 | 1 | | | | |
| 29 | 95027–06020 | BOLT, FLANGE | 1 | 1 | | | | |
| 30 | 90401–10172 | BOLT, UNION | 3 | 3 | | | | |
| 31 | 90201–10118 | WASHER, PLATE | 6 | 6 | | | | |

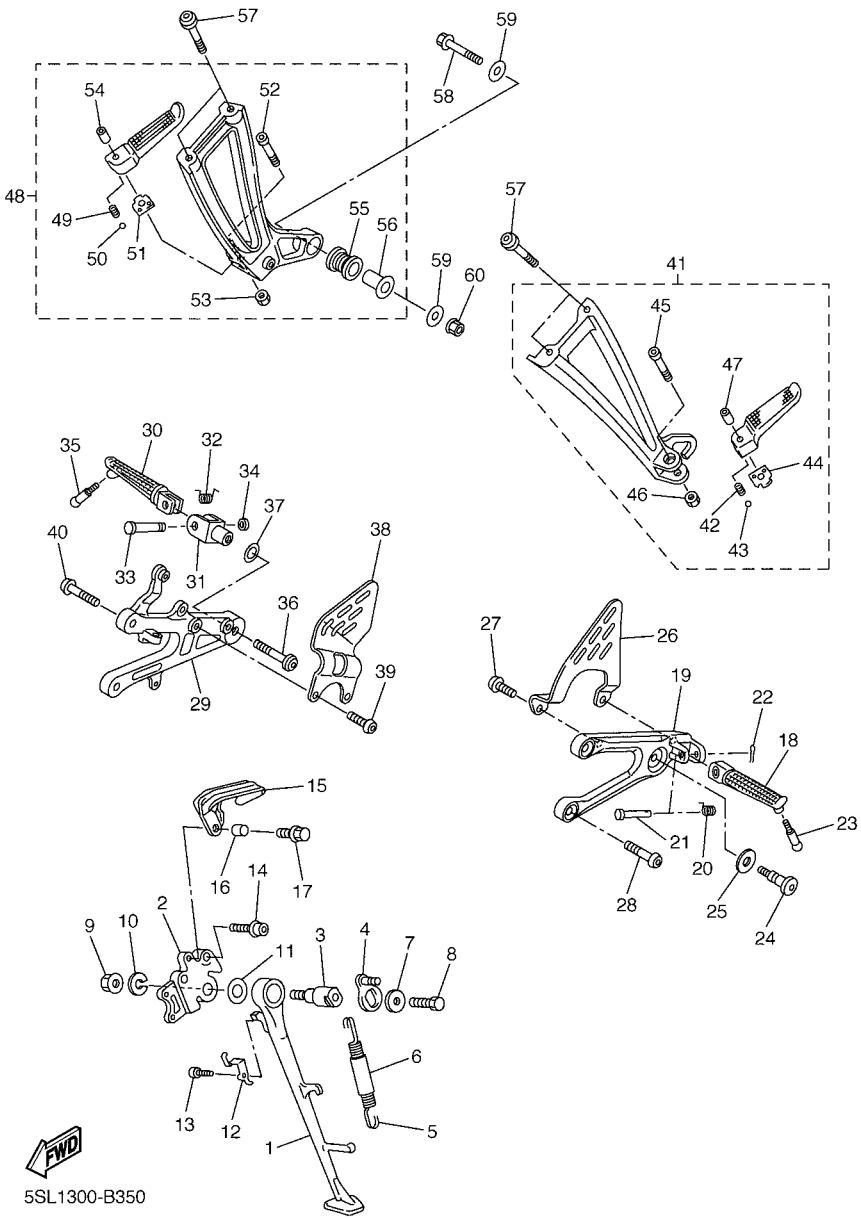


## FIG. 35 STAND & FOOTREST

| REF. NO. | PART NO. | DESCRIPTION | 5SLM | 5SLP | | | | REMARKS |
|---|---|---|---|---|---|---|---|---|
| 1 | 5SL–27311–10 | STAND, SIDE | 1 | 1 | | | | |
| 2 | 5SL–27321–00 | BRACKET, SIDE STAND | 1 | 1 | | | | |
| 3 | 4NX–27351–00 | GUIDE, SIDE STAND | 1 | 1 | | | | |
| 4 | 5PW–27352–00 | HOOK, SIDE STAND | 1 | 1 | | | | |
| 5 | 90506–18008 | SPRING, TENSION | 1 | 1 | | | | |
| 6 | 90445–19002 | HOSE (L60) | 1 | 1 | | | | |
| 7 | 90201–081R9 | WASHER, PLATE | 1 | 1 | | | | |
| 8 | 90101–08662 | BOLT | 1 | 1 | | | | |
| 9 | 95607–10200 | NUT, U FLANGE | 1 | 1 | | | | |
| 10 | 90201–101J1 | WASHER, PLATE | 1 | 1 | | | | |
| 11 | 90201–146F9 | WASHER, PLATE | 1 | 1 | | | | |
| 12 | 5JJ–27315–00 | LINK, SIDE STAND | 1 | 1 | | | | |
| 13 | 91317–06012 | BOLT | 1 | 1 | | | | |
| 14 | 90109–105G7 | BOLT | 2 | 2 | | | | |
| 15 | 5SL–22187–00 | GUIDE, CHAIN | 1 | 1 | | | | |
| 16 | 90387–073M0 | COLLAR | 1 | 1 | | | | |
| 17 | 90119–06192 | BOLT, WITH WASHER | 1 | 1 | | | | |
| 18 | 5SL–27451–00 | FOOTREST | 1 | 1 | | | | |
| 19 | 5SL–27442–00 | BRACKET 2 | 1 | 1 | | | | |
| 20 | 90508–18134 | SPRING, TORSION | 1 | 1 | | | | |
| 21 | 90240–08084 | PIN, CLEVIS | 1 | 1 | | | | |
| 22 | 91401–25015 | PIN, COTTER | 1 | 1 | | | | |
| 23 | 90109–08018 | BOLT | 1 | 1 | | | | |
| 24 | 4BP–27434–01 | BOLT | 1 | 1 | | | | |
| 25 | 90201–08326 | WASHER, PLATE | 1 | 1 | | | | |
| 26 | 5SL–27445–00 | PLATE 1 | 1 | 1 | | | | |
| 27 | 90149–06233 | SCREW | 2 | 2 | | | | |

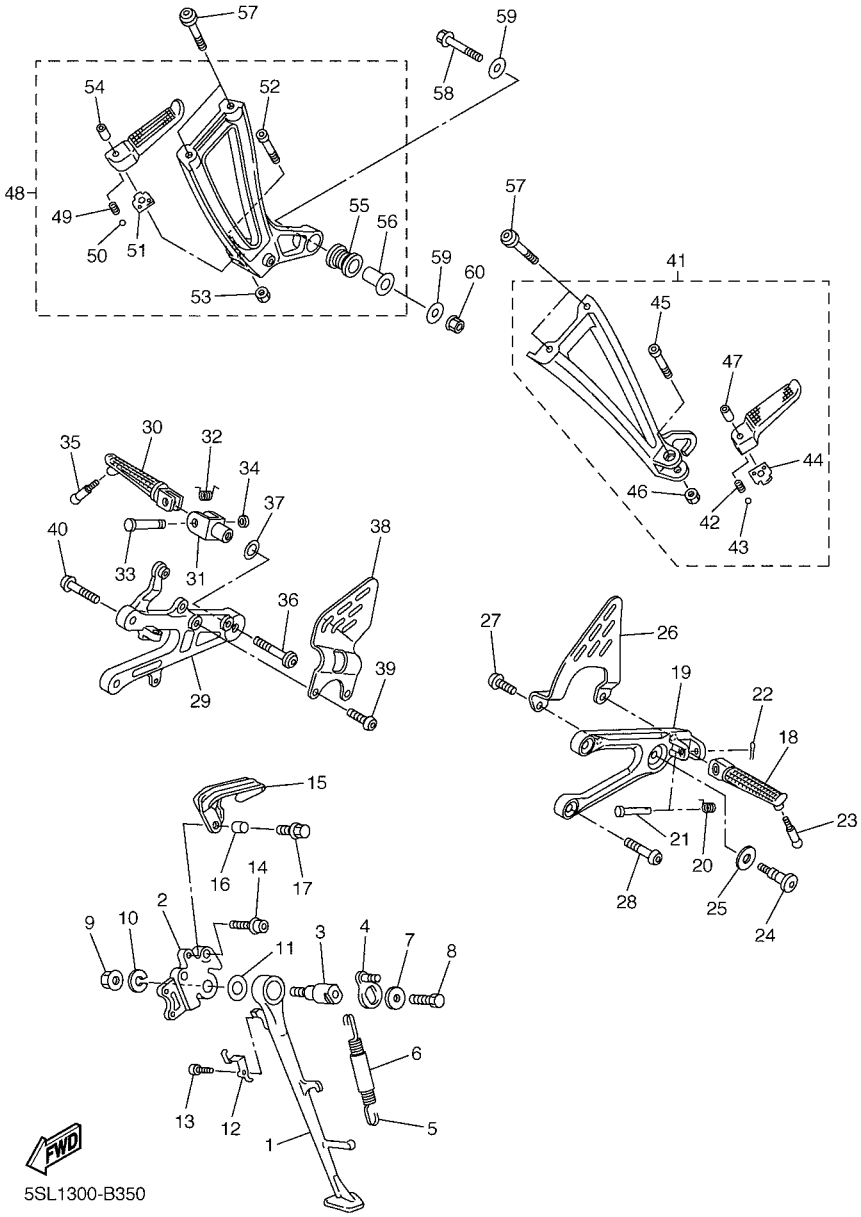


## FIG. 35 STAND & FOOTREST

| REF. NO. | PART NO. | DESCRIPTION | 5SLM | 5SLP | | | | REMARKS |
|---|---|---|---|---|---|---|---|---|
| 28 | 90109–085G6 | BOLT | 2 | 2 | | | | |
| 29 | 5SL–27443–00 | BRACKET 3 | 1 | 1 | | | | |
| 30 | 5SL–27461–00 | FOOTREST | 1 | 1 | | | | |
| 31 | 5JJ–27411–01 | FOOTREST 1 | 1 | 1 | | | | |
| 32 | 90508–18135 | SPRING, TORSION | 1 | 1 | | | | |
| 33 | 90243–08029 | PIN | 1 | 1 | | | | |
| 34 | 90201–06042 | WASHER, PLATE | 1 | 1 | | | | |
| 35 | 90109–08018 | BOLT | 1 | 1 | | | | |
| 36 | 90149–08296 | SCREW | 1 | 1 | | | | |
| 37 | 90201–13008 | WASHER, PLATE | 1 | 1 | | | | |
| 38 | 5SL–27446–00 | PLATE 2 | 1 | 1 | | | | |
| 39 | 90149–06233 | SCREW | 2 | 2 | | | | |
| 40 | 90109–085G6 | BOLT | 2 | 2 | | | | |
| 41 | 5SL–27430–00 | REAR FOOTREST ASSY 1 | 1 | 1 | | | | |
| 42 | 90501–12743 | .SPRING, COMPRESSION | 1 | 1 | | | | |
| 43 | 93501–04011 | .BALL | 1 | 1 | | | | |
| 44 | 5JJ–27437–00 | .WASHER, SPECIAL | 1 | 1 | | | | |
| 45 | 91314–06035 | .BOLT | 1 | 1 | | | | |
| 46 | 95604–06200 | .NUT, U FLANGE | 1 | 1 | | | | |
| 47 | 90387–06697 | .COLLAR | 1 | 1 | | | | |
| 48 | 5SL–27440–00 | REAR FOOTREST ASSY 2 | 1 | 1 | | | | |
| 49 | 90501–12743 | .SPRING, COMPRESSION | 1 | 1 | | | | |
| 50 | 93501–04011 | .BALL | 1 | 1 | | | | |
| 51 | 5JJ–27437–00 | .WASHER, SPECIAL | 1 | 1 | | | | |
| 52 | 91314–06035 | .BOLT | 1 | 1 | | | | |
| 53 | 95604–06200 | .NUT, U FLANGE | 1 | 1 | | | | |
| 54 | 90387–06697 | .COLLAR | 1 | 1 | | | | |

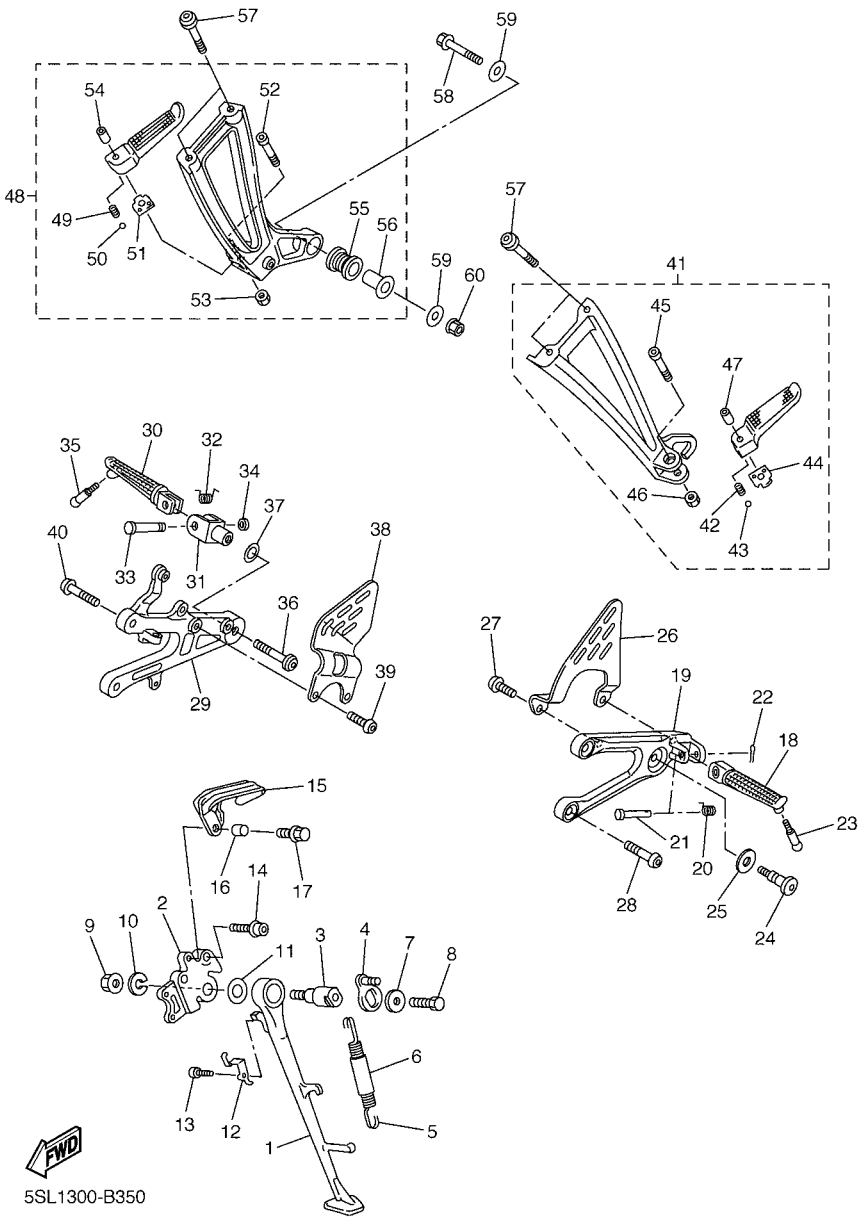


## FIG. 35 STAND & FOOTREST

| REF. NO. | PART NO. | DESCRIPTION | 5SLM | 5SLP | | | | REMARKS |
|---|---|---|---|---|---|---|---|---|
| 55 | 5SL–27424–00 | .DAMPER, FOOTREST 2 | 1 | 1 | | | | |
| 56 | 90387–08020 | .COLLAR | 1 | 1 | | | | |
| 57 | 90110–08220 | BOLT, HEXAGON SOCKET HEAD | 4 | 4 | | | | |
| 58 | 90105–08053 | BOLT, FLANGE | 1 | 1 | | | | |
| 59 | 90201–08034 | WASHER, PLATE | 2 | 2 | | | | |
| 60 | 95604–08200 | NUT, U FLANGE | 1 | 1 | | | | |

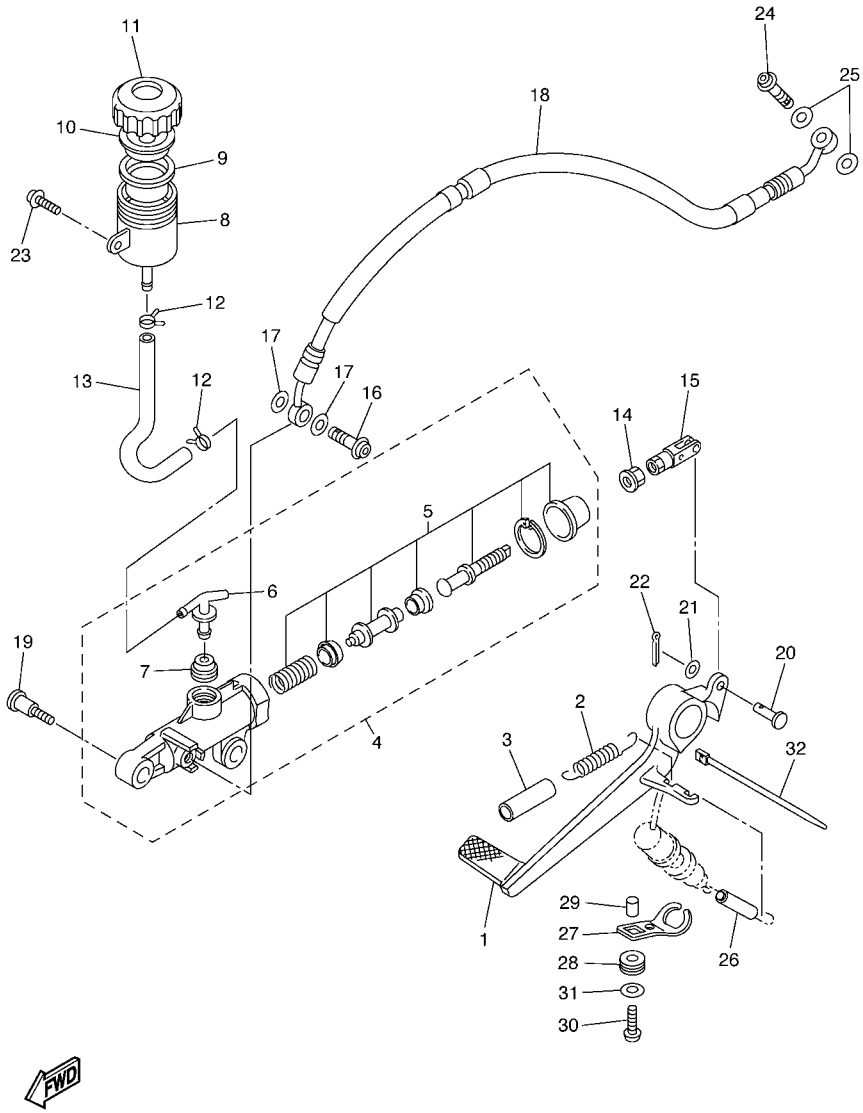


## FIG. 36 REAR MASTER CYLINDER

| REF. NO. | PART NO. | DESCRIPTION | 5SLM | 5SLP | | | | REMARKS |
|---|---|---|---|---|---|---|---|---|
| 1 | 5SL–27211–00 | PEDAL, BRAKE | 1 | 1 | | | | |
| 2 | 90506–20193 | SPRING, TENSION | 1 | 1 | | | | |
| 3 | 90446–15386 | HOSE | 1 | 1 | | | | |
| 4 | 5SL–2583V–00 | RR. MASTER CYLINDER ASSY. | 1 | 1 | | | | |
| 5 | 5SL–W0042–50 | .CYLINDER KIT, MASTER | 1 | 1 | | | | |
| 6 | 5SL–2582A–00 | .JOINT | 1 | 1 | | | | |
| 7 | 4BP–2585F–00 | .BUSH | 1 | 1 | | | | |
| 8 | 5SL–25894–00 | TANK, RESERVOIR | 1 | 1 | | | | |
| 9 | 5SL–25854–00 | DIAPHRAGM, RESERVOIR | 1 | 1 | | | | |
| 10 | 5SL–25855–00 | BUSH,DIAPHRAGM | 1 | 1 | | | | |
| 11 | 5SL–25852–00 | CAP, RESERVOIR | 1 | 1 | | | | |
| 12 | 90467–010A0 | CLIP | 2 | 2 | | | | |
| 13 | 5SL–25895–00 | HOSE, RESERVOIR | 1 | 1 | | | | |
| 14 | 95307–08700 | NUT | 1 | 1 | | | | |
| 15 | 5SL–27222–00 | JOINT | 1 | 1 | | | | |
| 16 | 90401–10172 | BOLT, UNION | 1 | 1 | | | | |
| 17 | 90201–10118 | WASHER, PLATE | 2 | 2 | | | | |
| 18 | 5SL–25874–00 | HOSE, BRAKE | 1 | 1 | | | | |
| 19 | 90109–06013 | BOLT | 2 | 2 | | | | |
| 20 | 91701–06018 | PIN, CLEVIS | 1 | 1 | | | | |
| 21 | 92907–06200 | WASHER | 1 | 1 | | | | |
| 22 | 91401–16012 | PIN, COTTER | 1 | 1 | | | | |
| 23 | 90159–06056 | SCREW, WITH WASHER | 1 | 1 | | | | |
| 24 | 90401–10172 | BOLT, UNION | 1 | 1 | | | | |
| 25 | 90201–10118 | WASHER, PLATE | 2 | 2 | | | | |
| 26 | 90446–08001 | HOSE | 1 | 1 | | | | |
| 27 | 5SL–2144G–00 | STAY, STOP SWITCH | 1 | 1 | | | | |

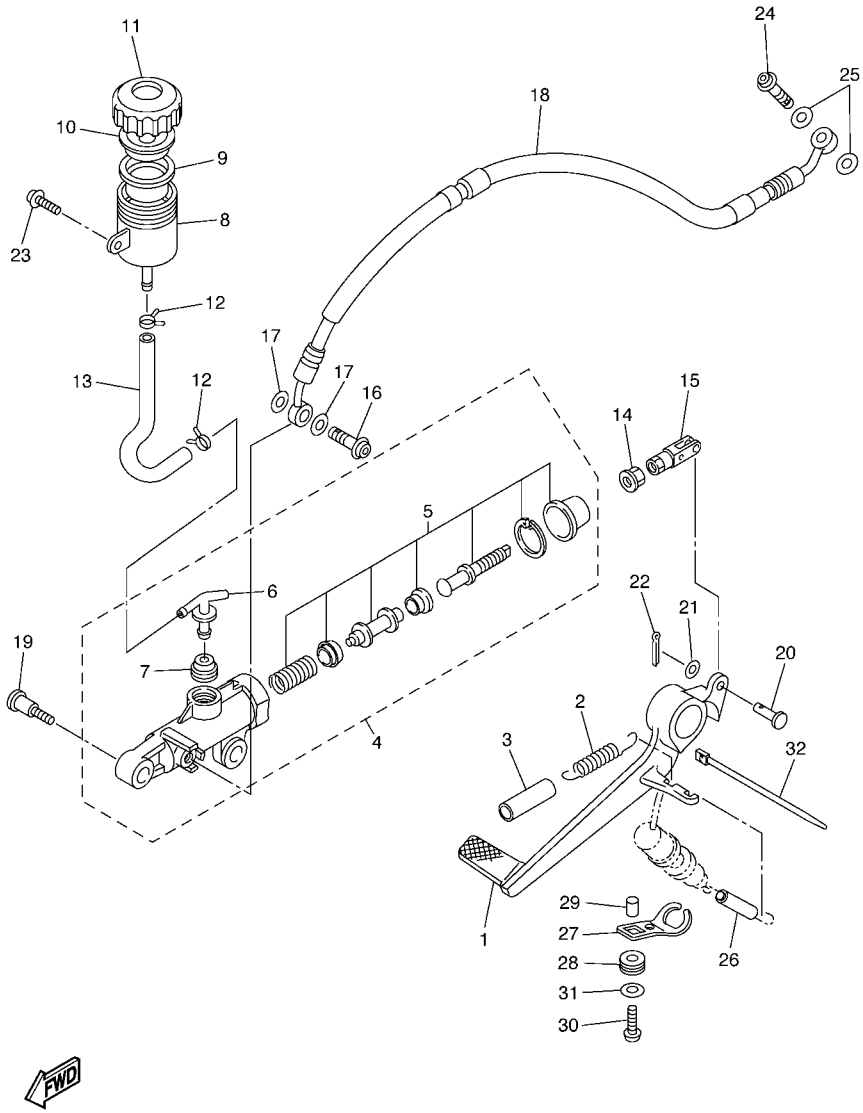


## FIG. 36 REAR MASTER CYLINDER

| REF. NO. | PART NO. | DESCRIPTION | 5SLM | 5SLP | | | | REMARKS |
|---|---|---|---|---|---|---|---|---|
| 28 | 90480–12607 | GROMMET | 1 | 1 | | | | |
| 29 | 90387–06023 | COLLAR | 1 | 1 | | | | |
| 30 | 92017–06016 | BOLT, BUTTON HEAD | 1 | 1 | | | | |
| 31 | 90201–06380 | WASHER, PLATE | 1 | 1 | | | | |
| 32 | 5Y9–12491–00 | CLAMP 1 | 1 | 1 | | | | |

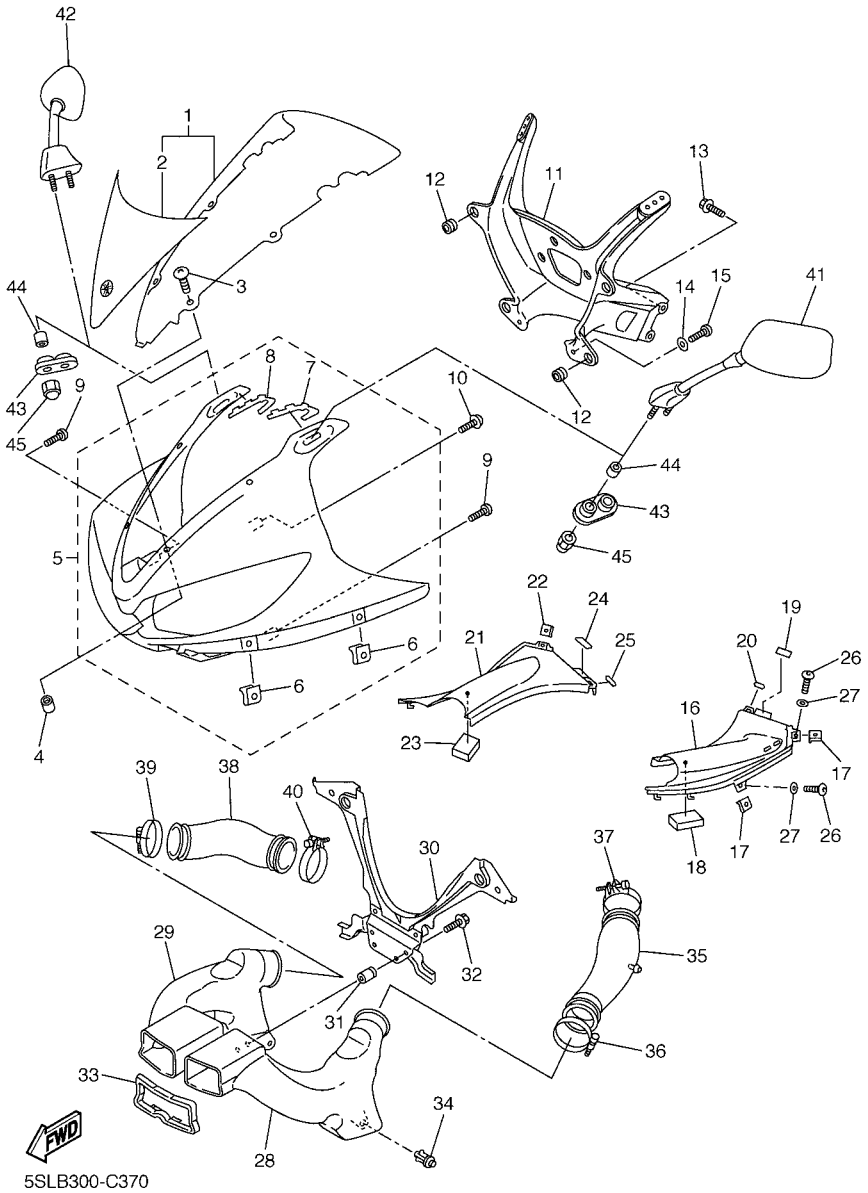


## FIG. 37 COWLING 1

| REF. NO. | PART NO. | DESCRIPTION | 5SLM | 5SLP | | | | REMARKS |
|---|---|---|---|---|---|---|---|---|
| 1 | 5SL–Y2881–00 | WINDSHIELD | 1 | 1 | | | | |
| 2 | 5SL–2832P–00 | .GRAPHIC 18 | 1 | 1 | | | | |
| 3 | 90150–05024 | SCREW, ROUND HEAD | 4 | 4 | | | | |
| 4 | 90179–05523 | NUT | 4 | 4 | | | | |
| 5 | 5SL–28330–01–P0 | UPPER COWLING ASSY | 1 | 1 | | | | UR VRC1 |
| | 5SL–28330–01–P1 | UPPER COWLING ASSY | 1 | 1 | | | | UR DPBMC |
| | 5SL–28330–01–P5 | UPPER COWLING ASSY | 1 | 1 | | | | UR SMX |
| 6 | 90183–05024 | .NUT, SPRING | 4 | 4 | | | | |
| 7 | 5SL–28428–00 | .SEAL 1 | 1 | 1 | | | | |
| 8 | 5SL–28429–00 | .SEAL 2 | 1 | 1 | | | | |
| 9 | 97707–50016 | SCREW, TAPPING | 3 | 3 | | | | |
| 10 | 90160–05007 | SCREW, ROUND TAPPING | 2 | 2 | | | | |
| 11 | 5SL–28356–00 | STAY 1 | 1 | 1 | | | | |
| 12 | 4XV–83513–00 | DAMPER | 7 | 7 | | | | |
| 13 | 90105–08052 | BOLT, FLANGE | 2 | 2 | | | | |
| 14 | 90202–05088 | WASHER, PLATE | 2 | 2 | | | | |
| 15 | 90167–05078 | SCREW, TAPPING | 2 | 2 | | | | |
| 16 | 5SL–2837L–01 | PANEL, CONSOLE 1 | 1 | 1 | | | | |
| 17 | 90183–05061 | NUT, SPRING | 2 | 2 | | | | |
| 18 | 4XY–21649–00 | DAMPER | 1 | 1 | | | | |
| 19 | 1FK–84527–00 | DAMPER | 1 | 1 | | | | |
| 20 | 5SL–28416–00 | DAMPER 2 | 1 | 1 | | | | |
| 21 | 5SL–2837M–01 | PANEL, CONSOLE 2 | 1 | 1 | | | | |
| 22 | 90183–05061 | NUT, SPRING | 2 | 2 | | | | |
| 23 | 4XY–21649–00 | DAMPER | 1 | 1 | | | | |
| 24 | 1FK–84527–00 | DAMPER | 1 | 1 | | | | |
| 25 | 5SL–28416–00 | DAMPER 2 | 1 | 1 | | | | |

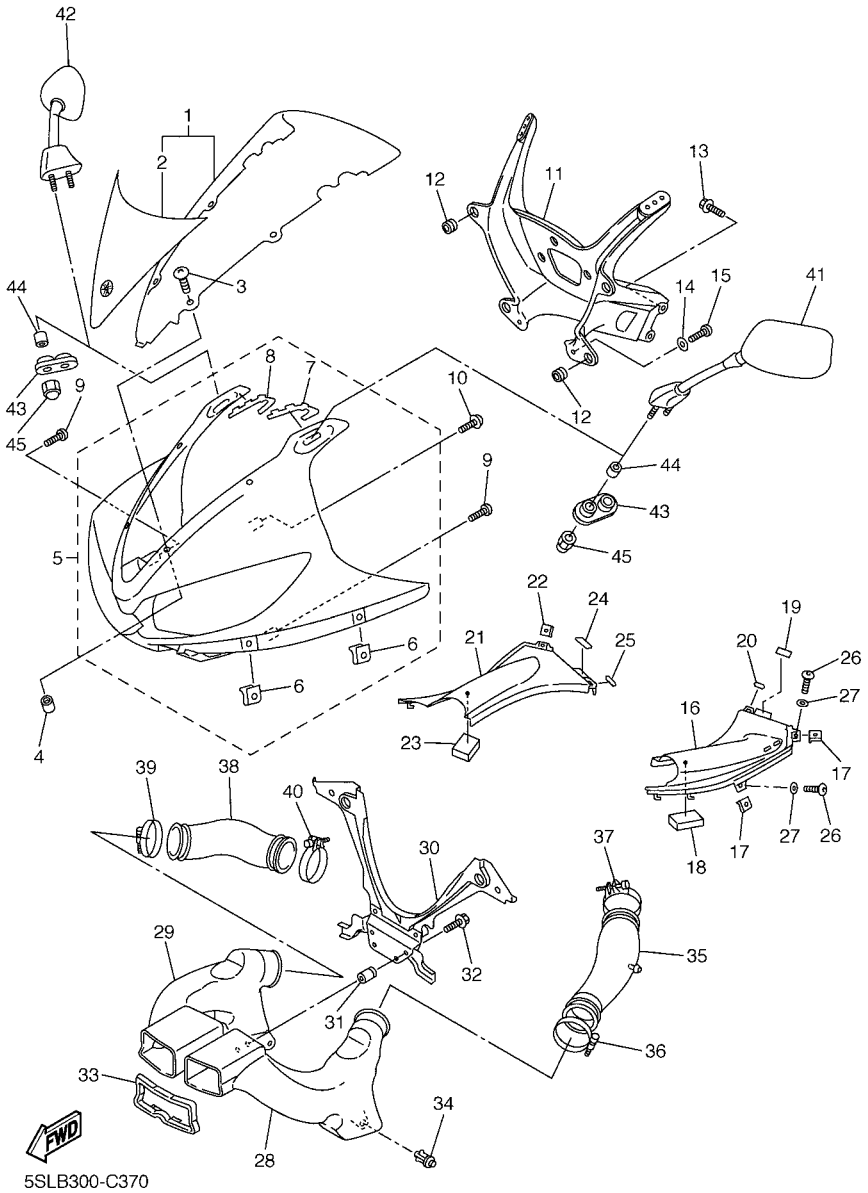


## FIG. 37 COWLING 1

| REF. NO. | PART NO. | DESCRIPTION | 5SLM | 5SLP | | | | REMARKS |
|---|---|---|---|---|---|---|---|---|
| 26 | 90111–05003 | BOLT | 4 | 4 | | | | |
| 27 | 90202–05180 | WASHER, PLATE | 4 | 4 | | | | |
| 28 | 5SL–2838R–00 | DUCT 2 | 1 | 1 | | | | |
| 29 | 5SL–2838T–00 | DUCT 3 | 1 | 1 | | | | |
| 30 | 5SL–2838E–00 | COVER, HEADLIGHT | 1 | 1 | | | | |
| 31 | 90179–05523 | NUT | 4 | 4 | | | | |
| 32 | 90119–05001 | BOLT, WITH WASHER | 4 | 4 | | | | |
| 33 | 5SL–28371–00 | DAMPER | 1 | 1 | | | | |
| 34 | 90269–06008 | RIVET | 2 | 2 | | | | |
| 35 | 5EB–1446F–00 | JOINT, SURGE TANK 1 | 1 | 1 | | | | |
| 36 | 4TV–13575–00 | BAND | 1 | 1 | | | | |
| 37 | 90460–59211 | CLAMP, HOSE | 1 | 1 | | | | |
| 38 | 5EB–1446F–00 | JOINT, SURGE TANK 1 | 1 | 1 | | | | |
| 39 | 4TV–13575–00 | BAND | 1 | 1 | | | | |
| 40 | 90460–59211 | CLAMP, HOSE | 1 | 1 | | | | |
| 41 | 5SL–26280–00 | REAR VIEW MIRROR ASSY (LEFT) | 1 | 1 | | | | |
| 42 | 5SL–26290–00 | REAR VIEW MIRROR ASSY (RIGHT) | 1 | 1 | | | | |
| 43 | 5SL–26298–00 | PLATE, MIRROR FITTING 1 | 2 | 2 | | | | |
| 44 | 90387–06057 | COLLAR | 4 | 4 | | | | |
| 45 | 90176–06008 | NUT, CROWN | 4 | 4 | | | | |

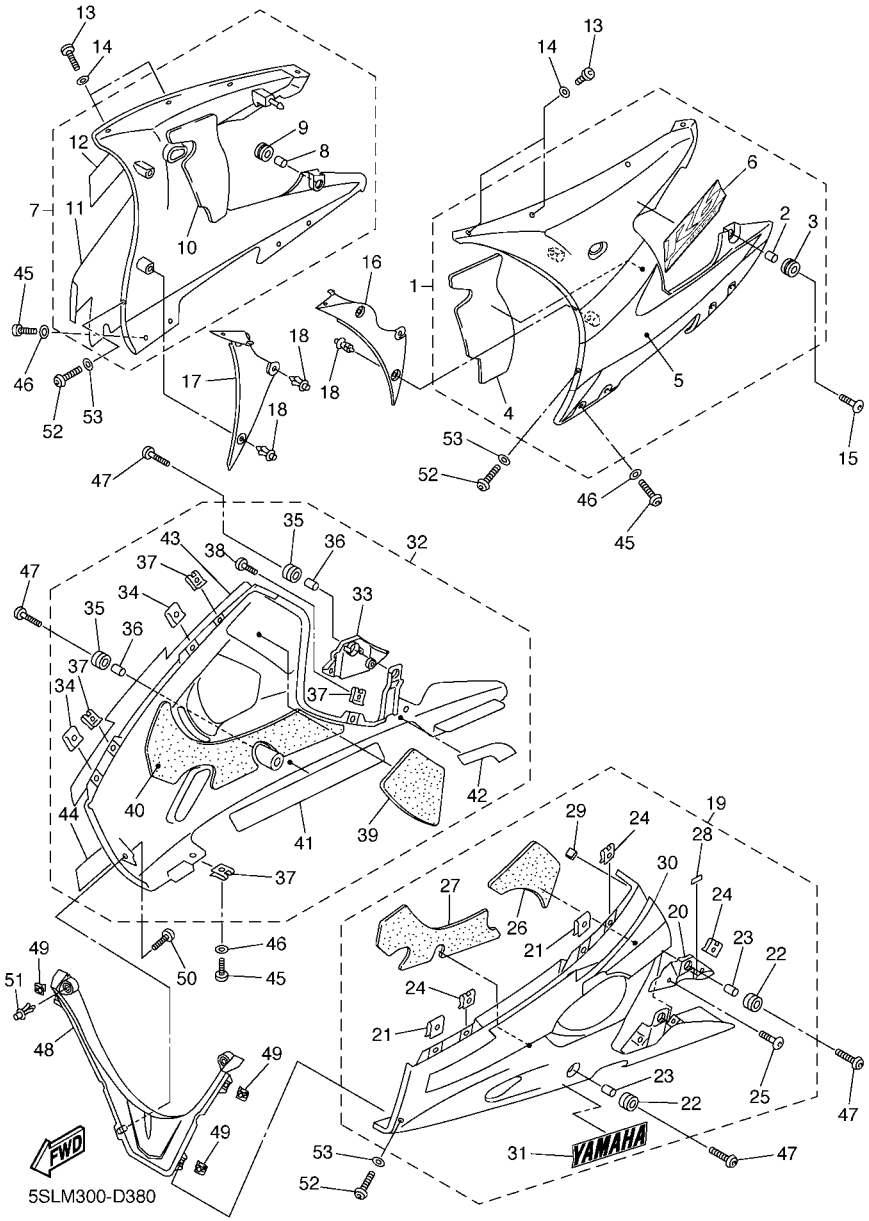


## FIG. 38 COWLING 2

| REF. NO. | PART NO. | DESCRIPTION | 5SLM | 5SLP | | | | REMARKS |
|---|---|---|---|---|---|---|---|---|
| 1 | 5SL–Y283U–F0–P2 | PANEL ASSEMBLY 1 | 1 | 1 | | | | UR VRC1 |
| | 5SL–Y283U–G0–P1 | PANEL ASSEMBLY 1 | 1 | 1 | | | | UR DPBMC |
| | 5SL–Y283U–H0–P0 | PANEL ASSEMBLY 1 | 1 | 1 | | | | UR MBL2 FOR SMX |
| 2 | 90387–06057 | .COLLAR | 1 | 1 | | | | |
| 3 | 90480–14003 | .GROMMET | 1 | 1 | | | | |
| 4 | 5SL–2836T–00 | .DAMPER, LOCATING 1 | 1 | 1 | | | | |
| 5 | 5SL–28391–30 | .GRAPHIC 1 | 1 | 1 | | | | UR FOR VRC1 |
| | 5SL–28391–40 | .GRAPHIC 1 | 1 | 1 | | | | UR FOR DPBMC |
| 6 | 5SL–2834C–B0 | .EMBLEM 1 | 1 | 1 | | | | UR FOR VRC1 |
| | 5SL–2834C–C0 | .EMBLEM 1 | 1 | 1 | | | | UR FOR DPBMC |
| | 5SL–2834C–D0 | .EMBLEM 1 | 1 | 1 | | | | UR FOR SMX |
| 7 | 5SL–Y283V–F0–P2 | PANEL ASSEMBLY 2 | 1 | 1 | | | | UR VRC1 |
| | 5SL–Y283V–G0–P1 | PANEL ASSEMBLY 2 | 1 | 1 | | | | UR DPBMC |
| | 5SL–Y283V–H0–P0 | PANEL ASSEMBLY 2 | 1 | 1 | | | | UR MBL2 FOR SMX |
| 8 | 90387–06057 | .COLLAR | 1 | 1 | | | | |
| 9 | 90480–14003 | .GROMMET | 1 | 1 | | | | |
| 10 | 5SL–2836U–00 | .DAMPER, LOCATING 2 | 1 | 1 | | | | |
| 11 | 5SL–28392–30 | .GRAPHIC 2 | 1 | 1 | | | | UR FOR VRC1 |
| | 5SL–28392–40 | .GRAPHIC 2 | 1 | 1 | | | | UR FOR DPBMC |
| 12 | 5SL–2834C–B0 | .EMBLEM 1 | 1 | 1 | | | | UR FOR VRC1 |
| | 5SL–2834C–C0 | .EMBLEM 1 | 1 | 1 | | | | UR FOR DPBMC |
| | 5SL–2834C–D0 | .EMBLEM 1 | 1 | 1 | | | | UR FOR SMX |
| 13 | 90111–05003 | BOLT | 4 | 4 | | | | |
| 14 | 90202–05180 | WASHER, PLATE | 4 | 4 | | | | |
| 15 | 90111–06040 | BOLT | 2 | 2 | | | | |
| 16 | 5SL–2836K–00 | PANEL, INNER 1 | 1 | 1 | | | | |
| 17 | 5SL–2836L–00 | PANEL, INNER 2 | 1 | 1 | | | | |

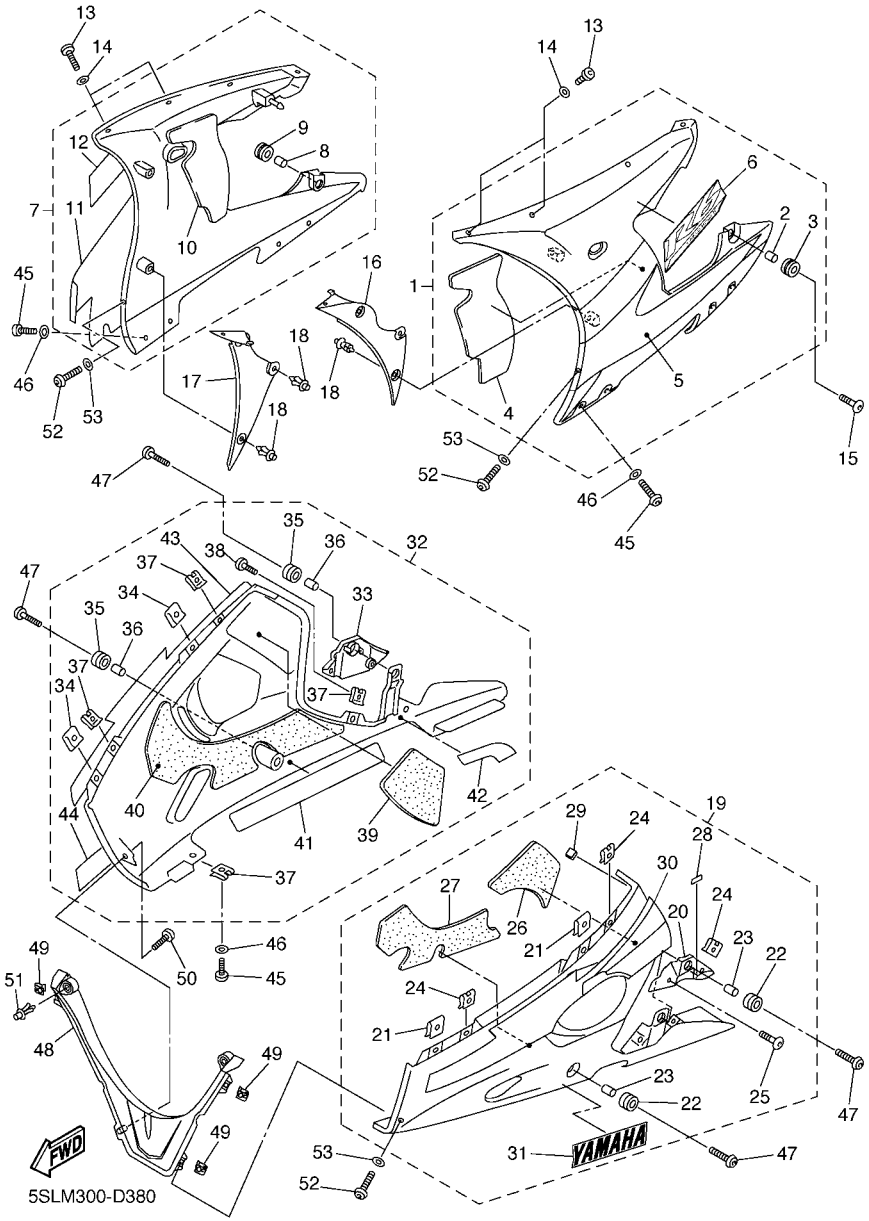


## FIG. 38 COWLING 2

| REF. NO. | PART NO. | DESCRIPTION | 5SLM | 5SLP | | | | REMARKS |
|---|---|---|---|---|---|---|---|---|
| 18 | 90269–06008 | RIVET | 6 | 6 | | | | |
| 19 | 5SL–Y2808–60–P0 | COVER ASSY, UNDER | 1 | 1 | | | | UR SMX FOR VRC1 |
| | 5SL–Y2808–70–P1 | COVER ASSY, UNDER | 1 | 1 | | | | UR DPBMC |
| | 5SL–Y2808–80–P0 | COVER ASSY, UNDER | 1 | 1 | | | | UR SMX FOR SMX |
| 20 | 5SL–2843J–00 | .COVER 3 | 1 | 1 | | | | |
| 21 | 90183–05024 | .NUT, SPRING | 2 | 2 | | | | |
| 22 | 90480–14003 | .GROMMET | 2 | 2 | | | | |
| 23 | 90387–06057 | .COLLAR | 2 | 2 | | | | |
| 24 | 90183–05061 | .NUT, SPRING | 5 | 5 | | | | |
| 25 | 90111–05002 | .BOLT | 2 | 2 | | | | |
| 26 | 5SL–2834E–00 | .DAMPER 1 | 1 | 1 | | | | |
| 27 | 5SL–2837J–00 | .DAMPER 5 | 1 | 1 | | | | |
| 28 | 1HX–27415–00 | .PLATE, DAMPER | 1 | 1 | | | | |
| 29 | 5SL–21649–00 | .DAMPER | 1 | 1 | | | | |
| 30 | 5SL–283A1–00 | .GRAPHIC, UNDER COVER 1 | 1 | 1 | | | | UR FOR VRC1,DPBMC |
| 31 | 99241–00280 | .EMBLEM, YAMAHA | 1 | 1 | | | | UR FOR VRC1,DPBMC |
| | 99247–00280 | .EMBLEM, YAMAHA | 1 | 1 | | | | UR FOR SMX |
| 32 | 5SL–Y2809–60–P0 | COVER ASSY 2, UNDER | 1 | 1 | | | | UR SMX FOR VRC1 |
| | 5SL–Y2809–70–P1 | COVER ASSY 2, UNDER | 1 | 1 | | | | UR DPBMC |
| | 5SL–Y2809–80–P0 | COVER ASSY 2, UNDER | 1 | 1 | | | | UR SMX FOR SMX |
| 33 | 5SL–2844J–00 | .COVER 4 | 1 | 1 | | | | |
| 34 | 90183–05024 | .NUT, SPRING | 2 | 2 | | | | |
| 35 | 90480–14003 | .GROMMET | 2 | 2 | | | | |
| 36 | 90387–06057 | .COLLAR | 2 | 2 | | | | |
| 37 | 90183–05061 | .NUT, SPRING | 4 | 4 | | | | |
| 38 | 90111–05002 | .BOLT | 2 | 2 | | | | |
| 39 | 5SL–2834F–00 | .DAMPER | 1 | 1 | | | | |

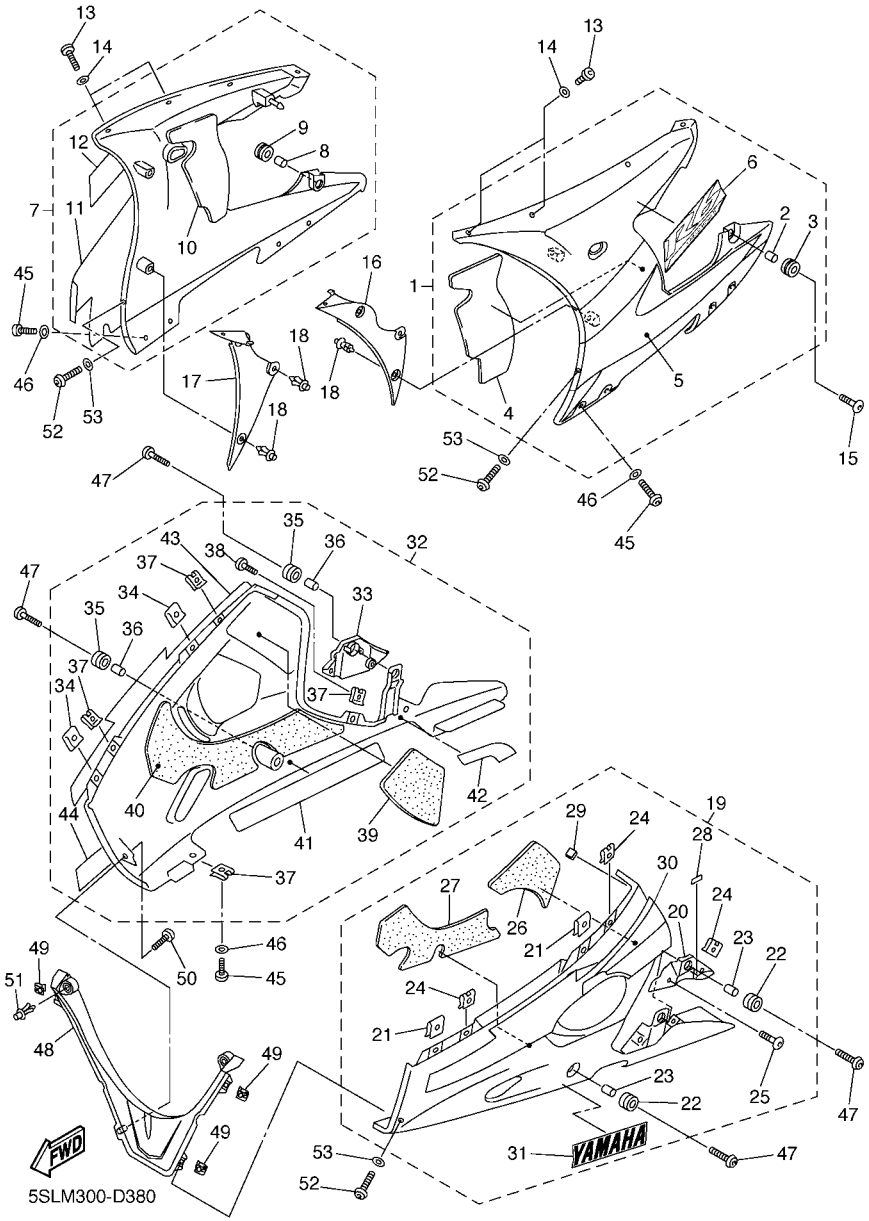


## FIG. 38 COWLING 2

| REF. NO. | PART NO. | DESCRIPTION | 5SLM | 5SLP | | | | REMARKS |
|---|---|---|---|---|---|---|---|---|
| 40 | 5SL–2837K–00 | .DAMPER 6 | 1 | 1 | | | | |
| 41 | 5SL–2838G–00 | .SEAT 1 | 1 | 1 | | | | |
| 42 | 5SL–2848K–00 | .SEAT 2 | 1 | 1 | | | | |
| 43 | 5SL–283A2–00 | .GRAPHIC, UNDER COVER 2 | 1 | 1 | | | | UR FOR VRC1,DPBMC |
| 44 | 99241–00280 | .EMBLEM, YAMAHA | 1 | 1 | | | | UR FOR VRC1,DPBMC |
| | 99247–00280 | .EMBLEM, YAMAHA | 1 | 1 | | | | UR FOR SMX |
| 45 | 90111–05003 | BOLT | 9 | 9 | | | | |
| 46 | 90202–05180 | WASHER, PLATE | 9 | 9 | | | | |
| 47 | 90111–06040 | BOLT | 4 | 4 | | | | |
| 48 | 5SL–2836M–10 | PANEL, INNER 3 | 1 | 1 | | | | |
| 49 | 90183–05061 | NUT, SPRING | 3 | 3 | | | | |
| 50 | 97707–50016 | SCREW, TAPPING | 1 | 1 | | | | |
| 51 | 90269–07007 | RIVET | 2 | 2 | | | | |
| 52 | 90111–05003 | BOLT | 3 | 3 | | | | |
| 53 | 90202–05180 | WASHER, PLATE | 3 | 3 | | | | |

## FIG. 39 GENERATOR

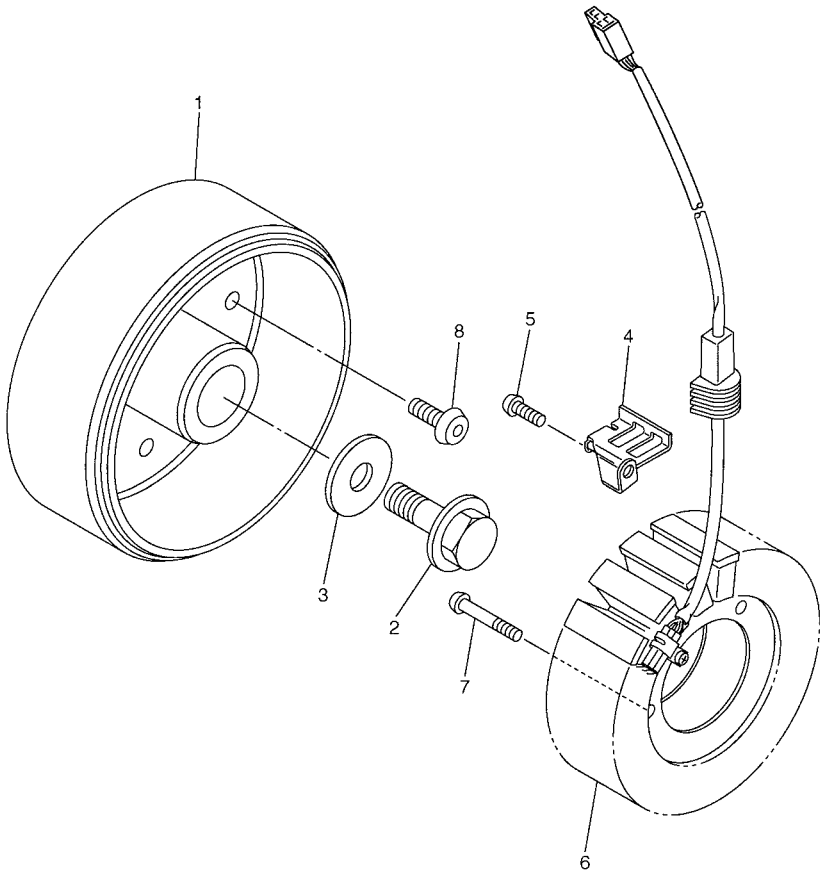


FWD

5SL1300-B390

| REF. NO. | PART NO. | DESCRIPTION | 5SLM | 5SLP | | | | REMARKS |
|---|---|---|---|---|---|---|---|---|
| 1 | 5SL–81450–01 | ROTOR ASSY | 1 | 1 | | | | |
| 2 | 90105–126A8 | BOLT, FLANGE | 1 | 1 | | | | |
| 3 | 90201–12008 | WASHER, PLATE | 1 | 1 | | | | |
| 4 | 5SL–15484–00 | CLAMP 2 | 1 | 1 | | | | |
| 5 | 90149–06018 | SCREW | 1 | 1 | | | | |
| 6 | 5SL–81410–00 | STATOR ASSY | 1 | 1 | | | | |
| 7 | 90149–06031 | SCREW | 3 | 3 | | | | |
| 8 | 90149–08003 | SCREW | 3 | 3 | | | | |

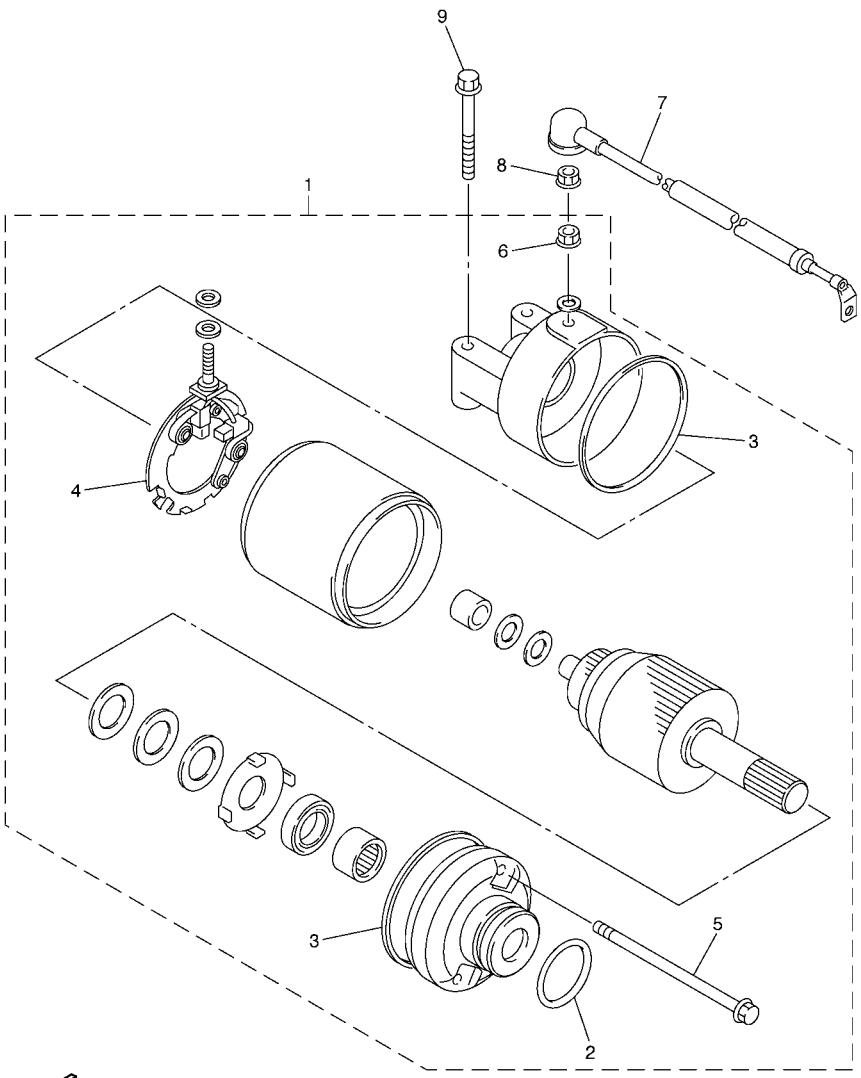


5SL1300-B400

## FIG. 40 STARTING MOTOR

| REF. NO. | PART NO. | DESCRIPTION | 5SLM | 5SLP | | | | REMARKS |
|---|---|---|---|---|---|---|---|---|
| 1 | 5EB–81890–00 | MOTOR ASSY | 1 | 1 | | | | |
| 2 | 1FK–81847–00 | .O-RING | 1 | 1 | | | | |
| 3 | 4WP–81844–00 | .GASKET | 2 | 2 | | | | |
| 4 | 4WP–81801–00 | .BRUSH SET | 1 | 1 | | | | |
| 5 | 4WP–81826–00 | .BOLT | 2 | 2 | | | | |
| 6 | 4XV–8182A–00 | .NUT | 1 | 1 | | | | |
| 7 | 5SL–8183G–00 | CORD COMP. | 1 | 1 | | | | |
| 8 | 4XV–8182A–00 | NUT | 1 | 1 | | | | |
| 9 | 95027–06040 | BOLT, FLANGE | 2 | 2 | | | | |

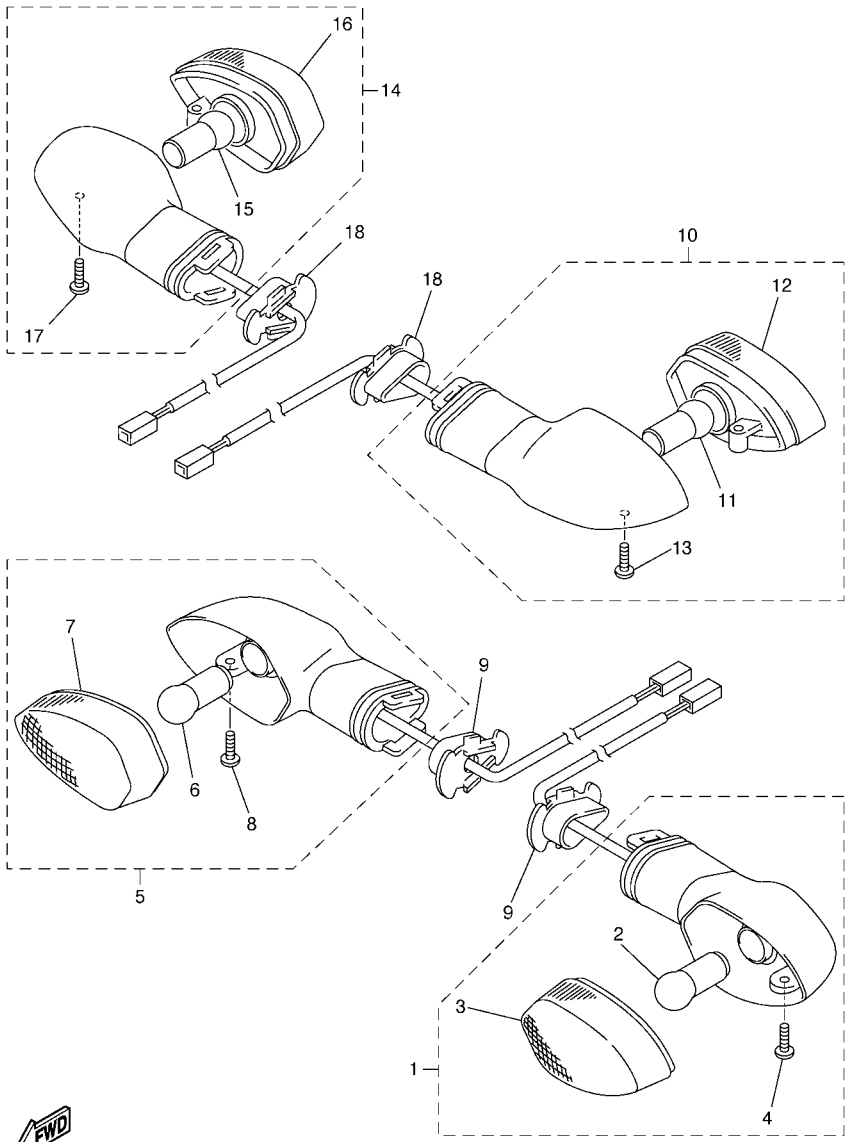


5PW1300-2410

## FIG. 41 FLASHER LIGHT

| REF. NO. | PART NO. | DESCRIPTION | 5SLM | 5SLP | | | | REMARKS |
|---|---|---|---|---|---|---|---|---|
| 1 | 5PW–83310–01 | FRONT FLASHER LIGHT ASSY 1 | 1 | 1 | | | | |
| 2 | 1KH–83311–00 | .BULB (12V-10W) | 1 | 1 | | | | |
| 3 | 5PW–8333A–00 | .LENS COMP | 1 | 1 | | | | |
| 4 | 97706–04012 | .SCREW, TAPPING | 1 | 1 | | | | |
| 5 | 5PW–83320–01 | FRONT FLASHER LIGHT ASSY 2 | 1 | 1 | | | | |
| 6 | 1KH–83311–00 | .BULB (12V-10W) | 1 | 1 | | | | |
| 7 | 5PW–8334A–00 | .LENS COMP | 1 | 1 | | | | |
| 8 | 97706–04012 | .SCREW, TAPPING | 1 | 1 | | | | |
| 9 | 5PW–83318–00 | STAY, FLASHER 1 | 2 | 2 | | | | |
| 10 | 5PW–83330–00 | REAR FLASHER LIGHT ASSY 1 | 1 | 1 | | | | |
| 11 | 1KH–83311–00 | .BULB (12V-10W) | 1 | 1 | | | | |
| 12 | 5PW–8334A–00 | .LENS COMP | 1 | 1 | | | | |
| 13 | 97706–04012 | .SCREW, TAPPING | 1 | 1 | | | | |
| 14 | 5PW–83340–00 | REAR FLASHER LIGHT ASSY 2 | 1 | 1 | | | | |
| 15 | 1KH–83311–00 | .BULB (12V-10W) | 1 | 1 | | | | |
| 16 | 5PW–8333A–00 | .LENS COMP | 1 | 1 | | | | |
| 17 | 97706–04012 | .SCREW, TAPPING | 1 | 1 | | | | |
| 18 | 5PW–83318–00 | STAY, FLASHER 1 | 2 | 2 | | | | |

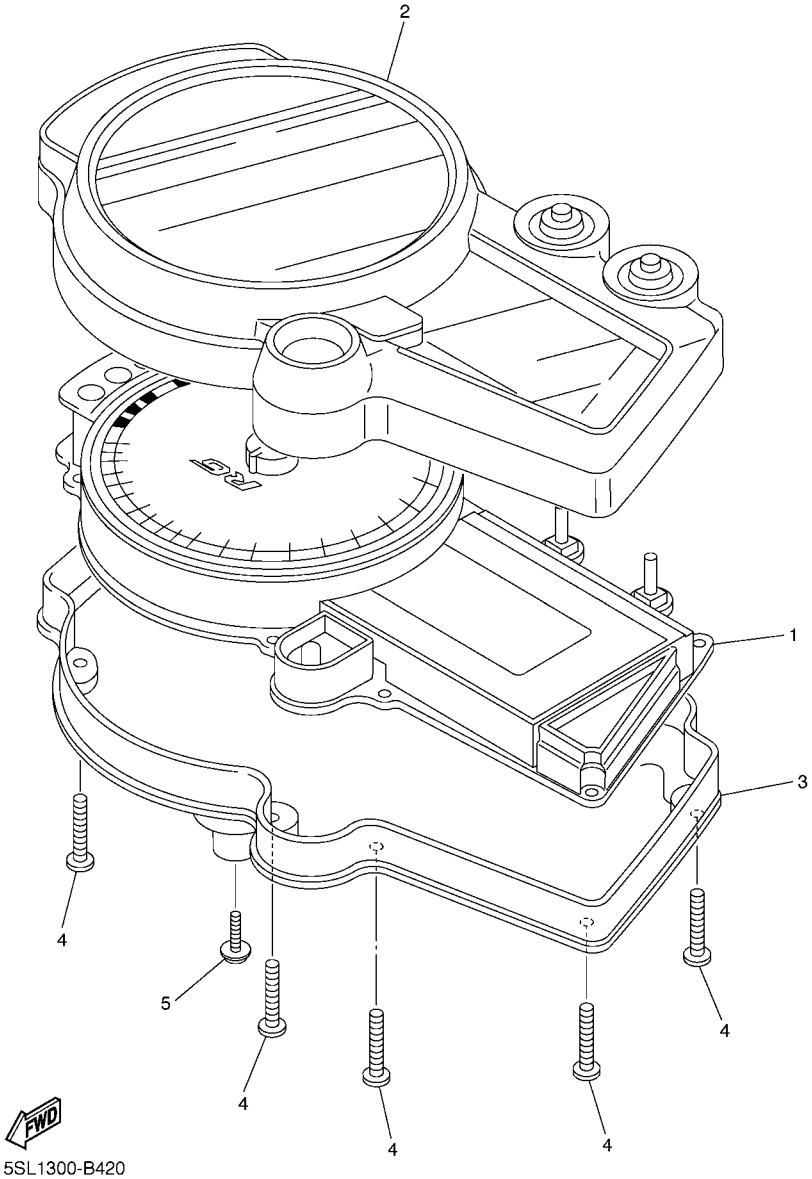


## FIG. 42 METER

| REF. NO. | PART NO. | DESCRIPTION | 5SLM | 5SLP | | | | REMARKS |
|---|---|---|---|---|---|---|---|---|
| 1 | 5SL–83570–01 | SPEEDOMETER ASSY (KM/H) | 1 | 1 | | | | |
| | 5SL–83570–11 | SPEEDOMETER ASSY (MPH) | 1 | | | | | FOR GBR |
| 2 | 5PW–8353E–00 | CASE, METER UPPER | 1 | 1 | | | | |
| 3 | 5PW–83572–00 | CASE, SPEEDOMETER LOWER | 1 | 1 | | | | |
| 4 | 5PW–8352S–00 | SCREW, PANEL FTTING | 8 | 8 | | | | |
| 5 | 90160–05006 | SCREW, ROUND TAPPING | 3 | 3 | | | | |

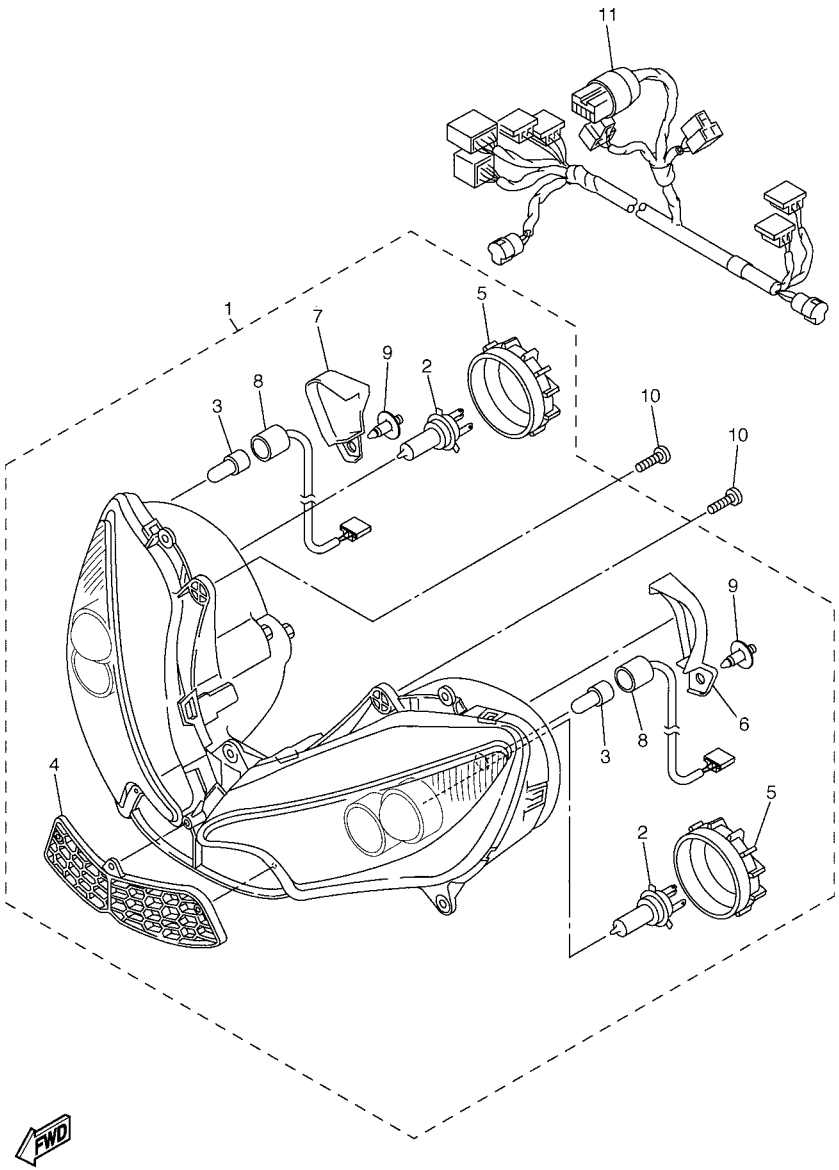


5SL1300-B431

## FIG. 43 HEADLIGHT

| REF. NO. | PART NO. | DESCRIPTION | 5SLM | 5SLP | | | | REMARKS |
|---|---|---|---|---|---|---|---|---|
| 1 | 5SL–84300–01 | HEADLIGHT ASSY | 1 | | | | | |
| | 5SL–84300–11 | HEADLIGHT ASSY | 1 | 1 | | | | FOR GBR,IRL,ZAF |
| 2 | 4SV–84314–00 | .BULB (12V-55W) | 2 | 2 | | | | (H7)HALOGEN |
| 3 | 4SV–84347–00 | .BULB (12V-5W) | 2 | 2 | | | | |
| 4 | 5SL–2837N–00 | .GRILL, AIR INTAKE 1 | 1 | 1 | | | | |
| 5 | 5SL–84397–00 | .COVER, SOCKET | 2 | 2 | | | | |
| 6 | 5SL–84196–00 | .COVER (L.H) | 1 | 1 | | | | |
| 7 | 5SL–84396–00 | .COVER (R.H) | 1 | 1 | | | | |
| 8 | 5SL–84312–00 | .CORD ASSY | 2 | 2 | | | | |
| 9 | 90269–06008 | .RIVET | 2 | 2 | | | | |
| 10 | 90160–05006 | SCREW, ROUND TAPPING | 4 | 4 | | | | |
| 11 | 5SL–84359–01 | CORD, HEADLIGHT | 1 | 1 | | | | |

## FIG. 44 TAILLIGHT

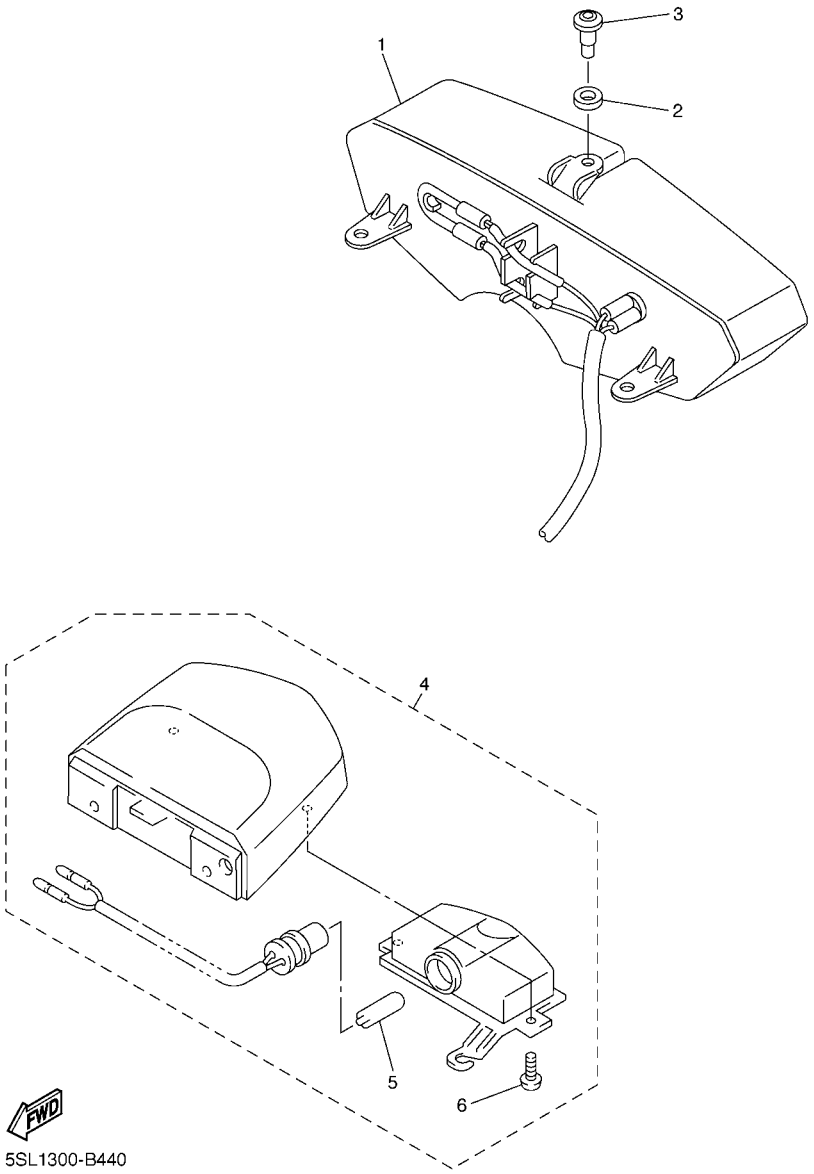


| REF. NO. | PART NO. | DESCRIPTION | 5SLM | 5SLP | | | | REMARKS |
|---|---|---|---|---|---|---|---|---|
| 1 | 5SL–84710–00 | TAILLIGHT UNIT ASSY | 1 | 1 | | | | |
| 2 | 5SL–84753–00 | DAMPER | 3 | 3 | | | | |
| 3 | 90269–06001 | RIVET | 3 | 3 | | | | |
| 4 | 5PW–84745–01 | LICENCE LIGHT UNIT ASSY | 1 | 1 | | | | |
| 5 | 4HC–84744–00 | .BULB (12V-5W) | 1 | 1 | | | | |
| 6 | 97706–04012 | .SCREW, TAPPING | 2 | 2 | | | | |

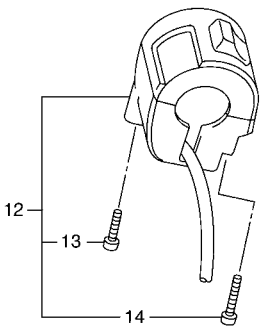


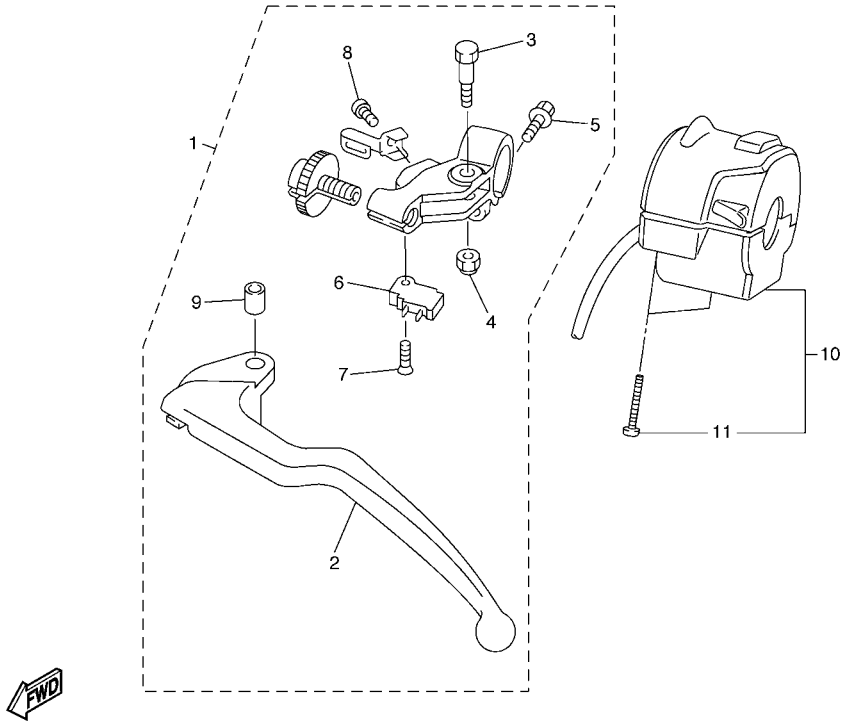


5SL1300-B450

## FIG. 45 HANDLE SWITCH & LEVER

| REF. NO. | PART NO. | DESCRIPTION | 5SLM | 5SLP | | | | REMARKS |
|---|---|---|---|---|---|---|---|---|
| 1 | 5EB–82910–04 | LEVER HOLDER ASSY (LEFT) | 1 | 1 | | | | |
| 2 | 5EB–83912–02 | .LEVER 1 | 1 | 1 | | | | |
| 3 | 4XV–83945–00 | .BOLT, LEVER | 1 | 1 | | | | |
| 4 | 95607–06100 | .NUT, U | 1 | 1 | | | | |
| 5 | 95027–06020 | .BOLT, FLANGE | 1 | 1 | | | | |
| 6 | 4XV–82917–01 | .SWITCH | 1 | 1 | | | | |
| 7 | 98707–03016 | .SCREW, FLAT HEAD | 1 | 1 | | | | |
| 8 | 98507–04010 | .SCREW, PAN HEAD | 1 | 1 | | | | |
| 9 | 5JJ–83913–00 | .COLLAR, LEVER 1 | 1 | 1 | | | | |
| 10 | 5SL–83969–02 | SWITCH, HANDLE 5 | 1 | 1 | | | | |
| 11 | 98507–05035 | .SCREW, PAN HEAD | 2 | 2 | | | | |
| 12 | 5SL–83975–01 | SWITCH, HANDLE 2 | 1 | 1 | | | | |
| 13 | 98507–05025 | .SCREW, PAN HEAD | 1 | 1 | | | | |
| 14 | 98507–05030 | .SCREW, PAN HEAD | 1 | 1 | | | | |

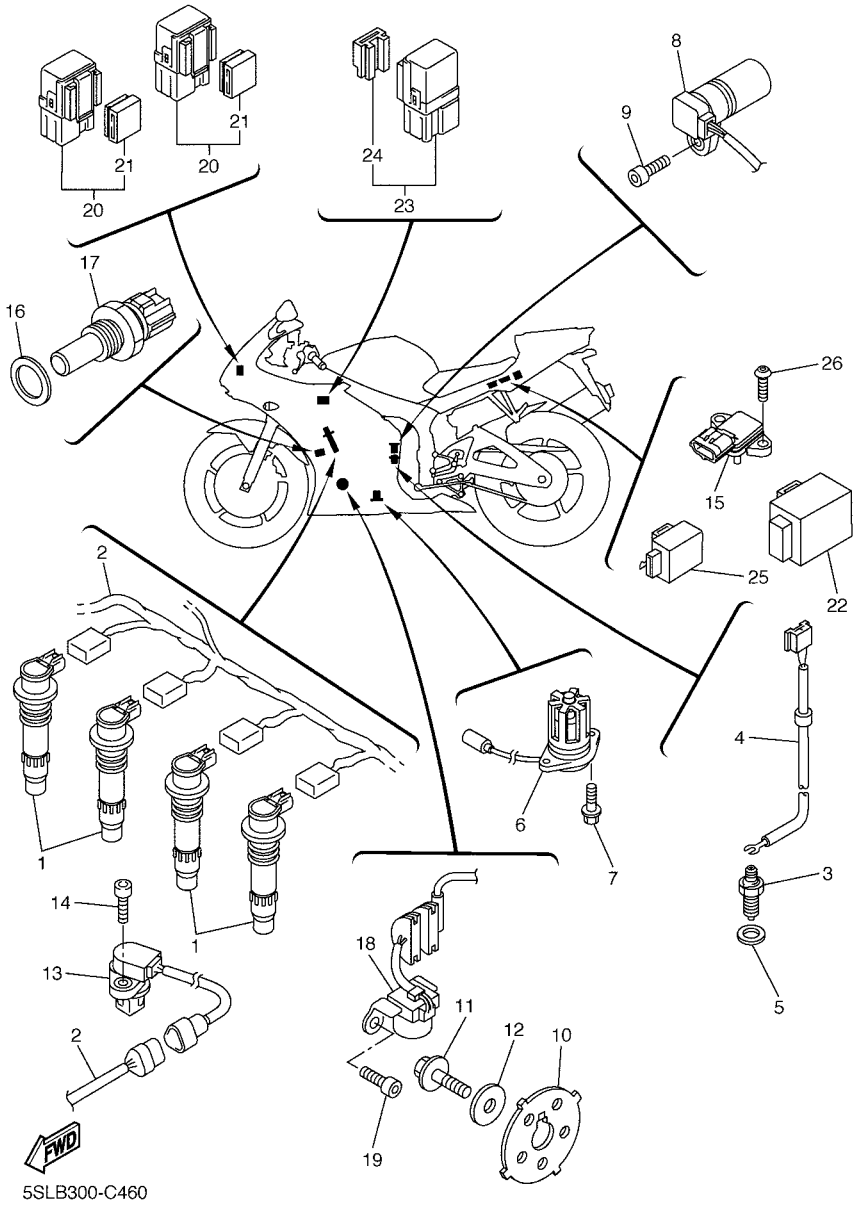


## FIG. 46 ELECTRICAL 1

| REF. NO. | PART NO. | DESCRIPTION | 5SLM | 5SLP | | | | REMARKS |
|---|---|---|---|---|---|---|---|---|
| 1 | 5SL–82310–20 | IGNITION COIL ASSY | 4 | 4 | | | | |
| 2 | 5SL–82309–12 | WIRE, SUB LEAD | 1 | 1 | | | | |
| 3 | 3GB–82540–01 | NEUTRAL SWITCH ASSY | 1 | 1 | | | | |
| 4 | 5SL–82541–00 | WIRE, LEAD | 1 | 1 | | | | |
| 5 | 90430–10148 | GASKET | 1 | 1 | | | | |
| 6 | 5SL–85720–01 | OIL LEVEL GAUGE ASSY | 1 | 1 | | | | |
| 7 | 95027–06016 | BOLT, FLANGE | 2 | 2 | | | | |
| 8 | 5EB–83755–01 | SENSOR, SPEED | 1 | 1 | | | | |
| 9 | 91317–06016 | BOLT | 1 | 1 | | | | |
| 10 | 5SL–81673–00 | ROTOR | 1 | 1 | | | | |
| 11 | 90105–08386 | BOLT, FLANGE | 1 | 1 | | | | |
| 12 | 90201–08753 | WASHER, PLATE | 1 | 1 | | | | |
| 13 | 5PW–85896–01 | SENSOR, CAM POSITION | 1 | 1 | | | | |
| 14 | 90110–06117 | BOLT, HEXAGON SOCKET HEAD | 1 | 1 | | | | |
| 15 | 5VX–82380–00 | SENSOR, PRESSURE | 1 | 1 | | | | |
| 16 | 90201–12790 | WASHER, PLATE | 1 | 1 | | | | |
| 17 | 8CC–85790–01 | THERMOSENSOR ASSY | 1 | 1 | | | | |
| 18 | 5SL–81670–00 | PICK-UP ASSY | 1 | 1 | | | | |
| 19 | 90110–06125 | BOLT, HEXAGON SOCKET HEAD | 2 | 2 | | | | |
| 20 | 5JJ–81950–20 | RELAY ASSY | 2 | 2 | | | | |
| 21 | 5JJ–81952–00 | .HOLDER, RELAY | 1 | 1 | | | | |
| 22 | 5VK–81950–40 | RELAY ASSY | 1 | 1 | | | | |
| 23 | 5EA–81950–20 | RELAY ASSY | 1 | 1 | | | | |
| 24 | 5EA–81952–00 | .HOLDER, RELAY | 1 | 1 | | | | |
| 25 | 4GY–83350–00 | FLASHER RELAY ASSY | 1 | 1 | | | | |
| 26 | 92017–05016 | BOLT, BUTTON HEAD | 1 | 1 | | | | |

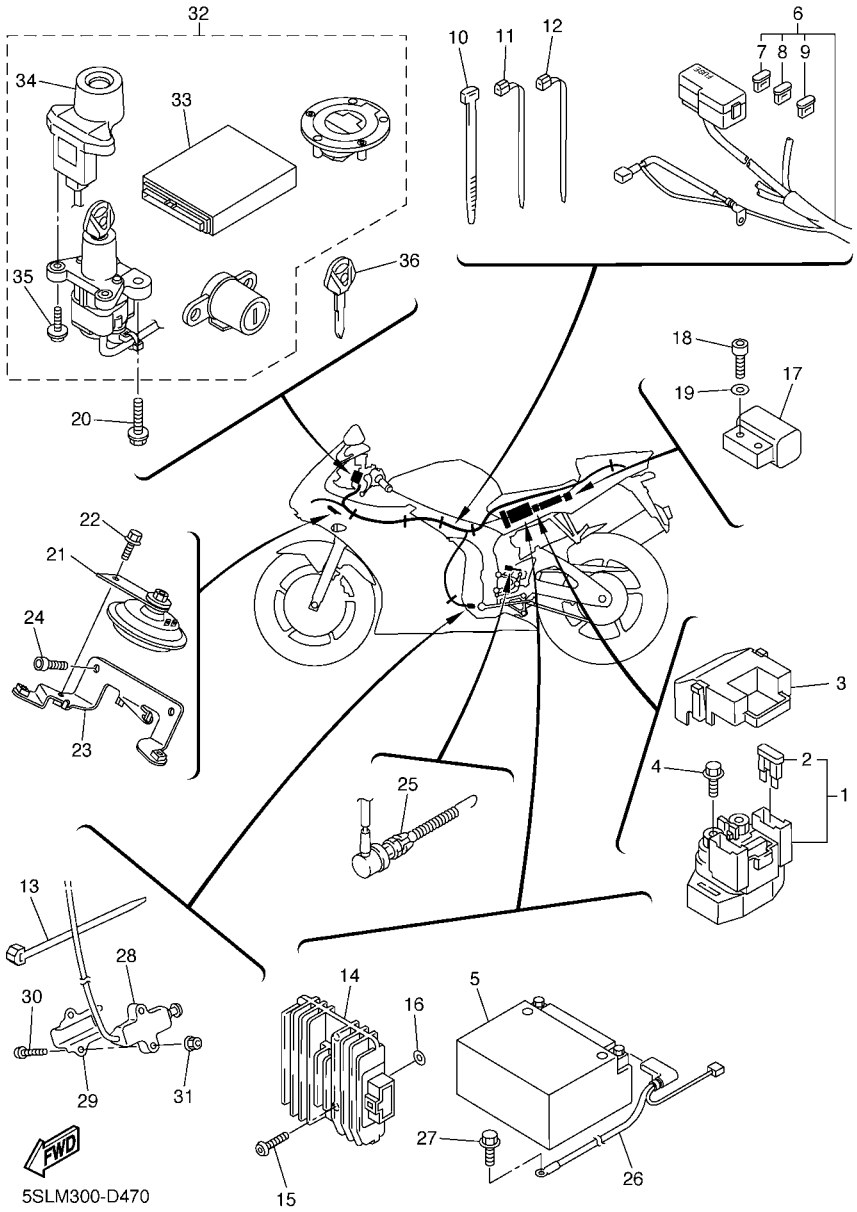


## FIG. 47 ELECTRICAL 2

| REF. NO. | PART NO. | DESCRIPTION | 5SLM | 5SLP | | | | REMARKS |
|---|---|---|---|---|---|---|---|---|
| 1 | 5SL–81940–11 | STARTER RELAY ASSY | 1 | 1 | | | | |
| 2 | 5EA–82151–00 | .FUSE (40A-BL) | 2 | 2 | | | | |
| 3 | 5SL–82119–10 | COVER, LEAD WIRE | 1 | 1 | | | | |
| 4 | 95027–06008 | BOLT, FLANGE | 2 | 2 | | | | |
| 5 | 5FL–82100–01 | BATTERY ASSY (GT9B-4) | 1 | 1 | | | | |
| 6 | 5SL–82590–40 | WIRE HARNESS ASSY | 1 | 1 | | | | |
| 7 | 5JJ–82151–10 | .FUSE (15A-BL) | 7 | 7 | | | | |
| 8 | 5JJ–82151–20 | .FUSE (20A-BL) | 2 | 2 | | | | |
| 9 | 5JJ–82151–30 | .FUSE (10A-BL) | 3 | 3 | | | | |
| 10 | 90464–15195 | CLAMP | 1 | 1 | | | | |
| 11 | 3MA–82591–00 | BAND | 2 | 2 | | | | |
| 12 | 90464–13077 | CLAMP | 1 | 1 | | | | |
| 13 | 90464–13073 | CLAMP | 1 | 1 | | | | |
| 14 | 5SL–81960–00 | RECTIFIER & REGULATOR ASSY | 1 | 1 | | | | |
| 15 | 92017–06025 | BOLT, BUTTON HEAD | 2 | 2 | | | | |
| 16 | 90202–06001 | WASHER, PLATE | 2 | 2 | | | | |
| 17 | 5PS–82576–01 | EMERGENCY STOP SWITCH ASSY | 1 | 1 | | | | |
| 18 | 91317–04025 | BOLT | 2 | 2 | | | | |
| 19 | 90201–042E0 | WASHER, PLATE | 2 | 2 | | | | |
| 20 | 90109–080G5 | BOLT | 2 | 2 | | | | |
| 21 | 4TH–83371–00 | HORN | 1 | 1 | | | | |
| 22 | 95807–06010 | BOLT, FLANGE | 1 | 1 | | | | |
| 23 | 5SL–23377–10 | BRACKET, HORN | 1 | 1 | | | | |
| 24 | 91317–06012 | BOLT | 2 | 2 | | | | |
| 25 | 5SL–82530–00 | STOP SWITCH ASSY | 1 | 1 | | | | |
| 26 | 5SL–82116–01 | WIRE, MINUS LEAD | 1 | 1 | | | | |
| 27 | 91380–06012 | BOLT | 1 | 1 | | | | |

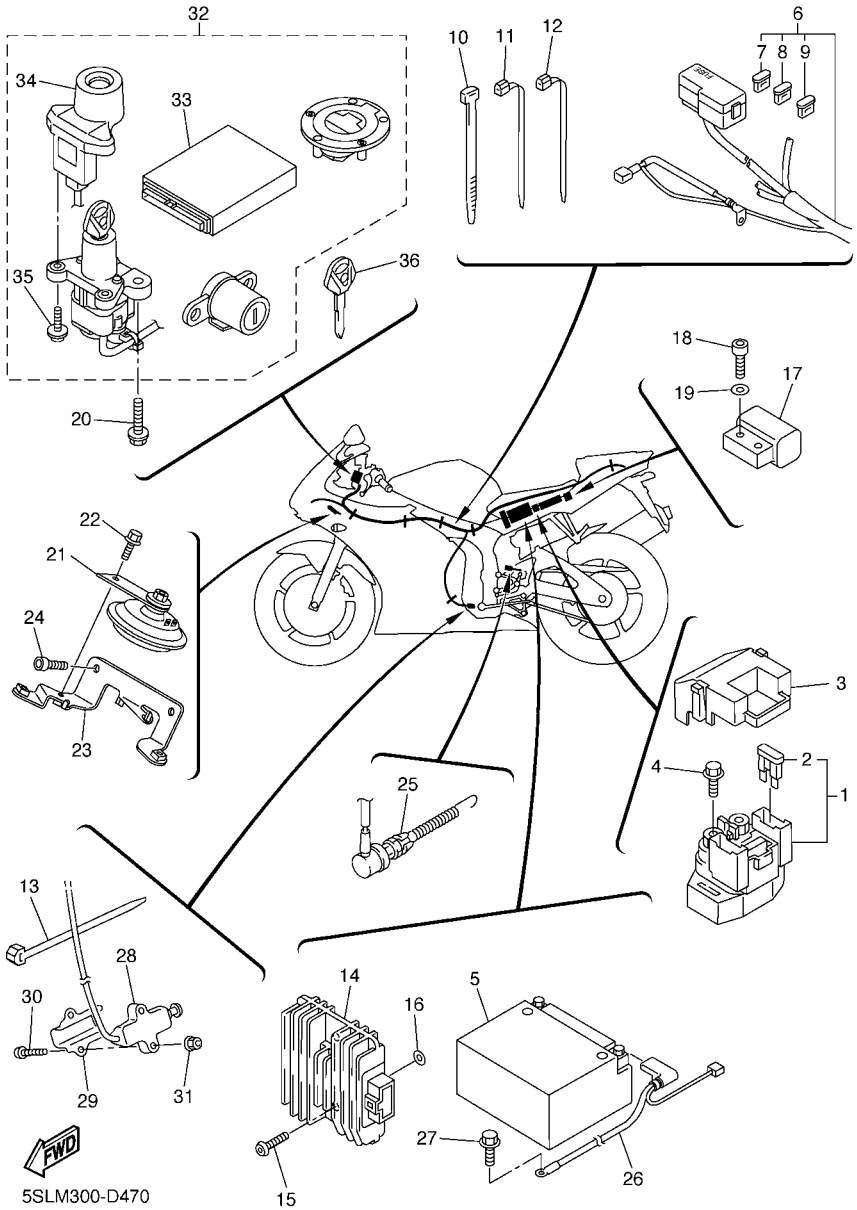


## FIG. 47 ELECTRICAL 2

| REF. NO. | PART NO. | DESCRIPTION | 5SLM | 5SLP | | | | REMARKS |
|---|---|---|---|---|---|---|---|---|
| 28 | 5PX–82566–71 | SWITCH, SIDE STAND | 1 | 1 | | | | |
| 29 | 5JJ–82388–00 | PLATE | 1 | 1 | | | | |
| 30 | 92017–05030 | BOLT, BUTTON HEAD | 2 | 2 | | | | |
| 31 | 95607–05200 | NUT, U FLANGE | 2 | 2 | | | | |
| 32 | 5SL–W8250–A0 | MAIN SW. IMMOBILIZER KIT | 1 | 1 | | | | |
| 33 | 5SL–8591A–A0 | .ENGINE CONTROL UNIT ASSY | 1 | 1 | | | | |
| 34 | 5SL–8255P–00 | .IMMOBILIZER. UNIT COMP. | 1 | 1 | | | | |
| 35 | 5SL–82113–00 | .SCREW | 2 | 2 | | | | |
| 36 | 5SL–82511–08 | BLANK KEY | 1 | 1 | | | | AP |

NUMERICAL INDEX

| PART NO. | GRID NO. |
|---|---|
| 5SL–11101–10 | B – 2 |
| 4KG–1111G–00 | B – 2 |
| 5EB–11133–10 | B – 2 |
| 5SL–11165–00 | C – 4 |
| 5SL–11181–00 | B – 2 |
| 5SL–11191–01 | B – 2 |
| 5SL–11193–00 | B – 2 |
| 214–11198–01 | B – 11 |
| 5SL–11411–00 | B – 3 |
| 5EB–11416–00 | B – 3 |
| 5EB–11416–10 | B – 3 |
| 5EB–11416–20 | B – 3 |
| 5EB–11416–30 | B – 3 |
| 5EB–11416–A0 | B – 3 |
| 5SL–11603–00 | B – 3 |
| 5SL–11631–00 | B – 3 |
| 5SL–11633–00 | B – 3 |
| 5SL–11650–00 | B – 3 |
| 5SL–11654–00 | B – 3 |
| 5SL–11656–00 | B – 3 |
| 5SL–11656–10 | B – 3 |
| 5SL–11656–20 | B – 3 |
| 5SL–11656–30 | B – 3 |
| 5SL–12111–10 | B – 4 |
| 5SL–12113–00 | B – 4 |
| 5SL–12114–00 | B – 4 |
| 5SL–12116–00 | B – 4 |
| 5EB–12117–00 | B – 4 |
| 1HX–12118–00 | B – 4 |
| 4TV–12119–00 | B – 4 |
| 5SL–12121–10 | B – 4 |
| 5EB–12124–01 | B – 4 |
| 5EB–12126–00 | B – 4 |
| 5EB–12127–00 | B – 4 |
| 5EB–12153–09 | B – 5 |
| 5EB–12153–20 | B – 5 |
| 5EB–12153–30 | B – 5 |
| 1HX–12168–00 | B – 4 |
| 1HX–12168–20 | B – 4 |
| 1HX–12168–40 | B – 4 |
| 1HX–12168–60 | B – 4 |
| 1HX–12168–80 | B – 4 |
| 1HX–12168–A0 | B – 4 |
| 1HX–12168–F0 | B – 4 |
| 1HX–12168–H1 | B – 4 |
| 1HX–12168–K1 | B – 4 |
| 1HX–12168–M1 | B – 4 |
| 1HX–12168–R1 | B – 4 |

| PART NO. | GRID NO. |
|---|---|
| 1HX–12168–U1 | B – 4 |
| 1HX–12168–W1 | B – 4 |
| 1HX–12168–Y1 | B – 4 |
| 1HX–12169–11 | B – 4 |
| 1HX–12169–31 | B – 4 |
| 1HX–12169–50 | B – 5 |
| 1HX–12169–70 | B – 5 |
| 1HX–12169–90 | B – 5 |
| 1HX–12169–E0 | B – 5 |
| 1HX–12169–G0 | B – 5 |
| 1HX–12169–J0 | B – 5 |
| 1HX–12169–L0 | B – 5 |
| 1HX–12169–N0 | B – 5 |
| 1HX–12169–T0 | B – 5 |
| 5SL–12170–00 | B – 6 |
| 5EB–12176–00 | B – 6 |
| 5SL–12180–00 | B – 6 |
| 5SL–12210–10 | B – 6 |
| 4FM–12213–00 | B – 6 |
| 5SL–12214–00 | B – 6 |
| 5EL–12228–00 | B – 6 |
| 5BE–12241–00 | B – 2 |
| 5EB–12251–00 | B – 6 |
| 5EB–12252–10 | B – 6 |
| 5VY–12277–00 | D – 10 |
| 5SL–12405–10 | B – 8 |
| 5SL–12405–20 | B – 8 |
| 5SL–12410–00 | B – 8 |
| 5EB–12413–00 | B – 8 |
| 5EB–12421–00 | B – 7 |
| 5SL–12422–00 | B – 7 |
| 11H–12438–10 | B – 7 |
| 5EB–12439–00 | B – 7 |
| 5SL–1243A–00 | B – 9 |
| 5SL–1243E–00 | B – 9 |
| 5SL–1244E–10 | B – 8 |
| 5SL–1244G–00 | B – 9 |
| 5EB–12450–00 | B – 7 |
| 5SL–12461–10 | B – 8 |
| 5SL–12462–00 | B – 8 |
| 5EB–12469–00 | B – 7 |
| 5GV–1246A–00 | B – 7 |
| 5GV–1246E–00 | B – 7 |
| | B – 8 |
| 5Y9–12491–00 | C – 2 |
| | E – 13 |
| 5SL–12551–10 | B – 8 |
| 5EB–12577–01 | B – 7 |

| PART NO. | GRID NO. |
|---|---|
| 5SL–12578–00 | B – 8 |
| 4NK–12579–00 | B – 7 |
| 5SL–12579–10 | B – 8 |
| 5EB–12581–00 | B – 7 |
| 5SL–12582–10 | B – 8 |
| 5SL–12588–01 | B – 7 |
| 5SL–12589–01 | B – 9 |
| 5SL–12659–00 | B – 8 |
| 5EB–12668–00 | B – 8 |
| 5GJ–12675–00 | B – 8 |
| 5SL–12682–10 | B – 13 |
| 5EB–12822–00 | B – 11 |
| 5EB–13161–00 | B – 10 |
| 5EB–1316E–00 | B – 10 |
| 5MT–13300–00 | B – 10 |
| 5SL–13410–00 | B – 10 |
| 5SL–13414–00 | B – 11 |
| 5EB–13415–00 | B – 10 |
| 5JW–13416–00 | B – 10 |
| 5SL–13417–00 | B – 11 |
| 5EB–13418–00 | C – 4 |
| 5GH–13440–00 | B – 11 |
| 5EB–13470–00 | B – 11 |
| 5JW–13473–00 | B – 11 |
| 5EB–13475–00 | B – 11 |
| 3KS–13490–00 | B – 11 |
| 68V–13533–00 | B – 15 |
| 5SL–13556–00 | B – 14 |
| 4TV–13575–00 | E – 15 |
| 5SL–13586–10 | B – 12 |
| 5SL–13596–10 | B – 12 |
| 5SL–13750–30 | B – 14 |
| 5SL–13761–00 | B – 14 |
| 5EB–13898–00 | B – 10 |
| 5SL–13906–10 | B – 14 |
| 5PW–13907–01 | D – 12 |
| 5SL–13971–00 | B – 15 |
| 5SL–13972–00 | B – 15 |
| 5SL–14103–00 | B – 14 |
| 5JW–14104–00 | B – 14 |
| 5PW–1410F–00 | B – 15 |
| 5PW–14112–00 | B – 15 |
| 5JW–14118–00 | B – 14 |
| 3H1–14147–00 | B – 14 |
| 5FL–14147–00 | B – 14 |
| 5SL–14148–00 | B – 14 |
| 4KM–14216–00 | B – 14 |
| 8CC–14216–10 | B – 14 |

| PART NO. | GRID NO. |
|---|---|
| 5PW–14251–00 | B – 15 |
| 5SL–14348–00 | B – 14 |
| 5FL–14348–10 | B – 15 |
| 5PW–14349–00 | B – 15 |
| 5SL–14349–00 | B – 14 |
| 5PW–14396–00 | B – 15 |
| 5SL–14411–00 | B – 12 |
| 5SL–14413–00 | B – 15 |
| 5EB–1441F–01 | B – 12 |
| 5SL–14421–00 | B – 12 |
| 5CA–14435–00 | B – 12 |
| 5SL–14450–00 | B – 12 |
| 5EB–14452–00 | B – 12 |
| 5SL–14453–10 | B – 12 |
| 5EB–14457–00 | B – 12 |
| 5EB–14462–00 | B – 12 |
| 5SL–14469–10 | B – 12 |
| 5EB–1446F–00 | E – 15 |
| 5SL–14477–00 | B – 12 |
| 5SL–14479–10 | B – 12 |
| 5JW–14589–00 | B – 14 |
| 5SL–14602–01 | C – 3 |
| 3YF–14613–01 | C – 3 |
| 5SL–14710–20 | C – 3 |
| 5SL–14714–00 | C – 3 |
| 5SL–14715–00 | C – 3 |
| 5EB–14733–00 | D – 4 |
| 5SL–1482K–00 | B – 2 |
| 5SL–14834–10 | C – 2 |
| 5SL–14840–00 | C – 2 |
| 5SL–14881–00 | C – 2 |
| 5SL–14882–00 | C – 2 |
| 5SL–14890–00 | B – 2 |
| 5SL–14899–00 | B – 2 |
| 4SV–14933–00 | B – 14 |
| 5SL–14987–00 | B – 14 |
| 5SL–15100–01 | C – 4 |
| 11H–15138–00 | B – 2 |
| 5EB–15155–00 | C – 4 |
| 5EB–15163–01 | C – 11 |
| 36Y–15189–00 | C – 4 |
| 5SL–15189–00 | C – 4 |
| 3F9–15362–00 | C – 6 |
| 5EB–15362–00 | C – 5 |
| 5SL–15373–00 | B – 12 |
| 5SL–15377–00 | C – 5 |
| 5SL–15411–00 | C – 6 |
| 5VX–15413–01 | C – 4 |

| PART NO. | GRID NO. |
|---|---|
| 5SL–15416–00 | C – 6 |
| 5SL–15418–00 | C – 6 |
| 5SL–15421–00 | C – 6 |
| 5SL–15425–00 | C – 6 |
| 5EB–15441–00 | C – 7 |
| 5VX–15451–00 | C – 6 |
| 5SL–15456–00 | C – 6 |
| 5SL–15461–00 | C – 6 |
| 5SL–15462–00 | C – 4 |
| 5SL–15463–00 | C – 7 |
| 5SL–15484–00 | F – 5 |
| 5SL–15512–00 | C – 8 |
| 5MT–15515–00 | C – 8 |
| 5MT–15521–00 | C – 8 |
| 5SL–15590–00 | C – 8 |
| 5SL–16150–10 | C – 9 |
| 5EB–16154–00 | C – 9 |
| 1AE–16164–00 | C – 9 |
| 4FN–16321–00 | C – 9 |
| 5SL–16321–00 | C – 9 |
| 168–16324–00 | C – 9 |
| 3J2–16324–00 | C – 9 |
| 5SL–16340–00 | C – 9 |
| 132–16346–00 | C – 14 |
| 5EB–16351–01 | C – 9 |
| 5EB–16356–01 | C – 9 |
| 5SL–16371–00 | C – 9 |
| 5EB–16382–00 | C – 9 |
| 5SL–17121–00 | C – 11 |
| 5SL–17131–20 | C – 11 |
| 5SL–17151–20 | C – 11 |
| 5SL–17161–00 | C – 11 |
| 5SL–17211–00 | C – 12 |
| 5SL–17221–10 | C – 11 |
| 5SL–17231–00 | C – 12 |
| 5SL–17241–00 | C – 11 |
| 5SL–17251–00 | C – 12 |
| 5SL–17261–10 | C – 11 |
| 5SL–17411–00 | C – 11 |
| 5SL–17421–00 | C – 11 |
| 278–17424–01 | C – 12 |
| 5SL–17460–00 | C – 12 |
| 5SL–18101–00 | C – 14 |
| 5EB–18110–10 | C – 14 |
| 5EB–18112–01 | C – 14 |
| 5EB–18113–00 | C – 14 |
| 5SL–18115–00 | C – 14 |
| 5LV–18116–00 | C – 14 |

| PART NO. | GRID NO. |
|---|---|
| 5SL–18127–00 | C – 14 |
| 5SL–18140–00 | C – 14 |
| 2H9–18154–00 | C – 14 |
| 4XV–18154–00 | C – 14 |
| 5SL–18511–00 | C – 13 |
| 5MT–18512–00 | C – 13 |
| 5EB–18513–00 | C – 13 |
| 4XV–18531–00 | C – 13 |
| 5EB–18536–00 | C – 13 |
| 5SL–18540–00 | C – 13 |
| 136–18542–00 | C – 13 |
| 5SL–21110–01 | C – 15 |
| 5SL–21110–11 | C – 15 |
| 5SL–2117M–10 | D – 2 |
| 5SL–2117V–00 | C – 15 |
| 5SL–2117W–00 | C – 15 |
| 5SL–21190–00 | C – 15 |
| 5SL–21208–00 | D – 2 |
| 5SL–21268–00 | D – 2 |
| 5SL–21283–00 | C – 15 |
| 3YX–21376–00 | D – 3 |
| 5SL–2139X–00 | D – 2 |
| 5SL–21446–10 | C – 3 |
| 5SL–2144G–00 | E – 12 |
| 5SL–21486–00 | C – 15 |
| 5SL–21488–00 | C – 15 |
| 5EB–21495–00 | D – 2 |
| 5PW–21511–00–P0 | D – 3 |
| 5PW–21511–00–P1 | D – 3 |
| 5PW–21511–00–P6 | D – 3 |
| 5SL–21611–00–P0 | D – 4 |
| 5SL–21611–00–P1 | D – 4 |
| 5SL–21611–00–P4 | D – 4 |
| 5PW–2161G–00 | D – 4 |
| 5SL–21621–00 | D – 4 |
| 5SL–21629–01 | D – 4 |
| 5SL–21629–21 | D – 4 |
| 36Y–21639–00 | D – 2 |
| 5SL–21639–00 | D – 7 |
| 5SL–21646–00 | D – 3 |
| 5SL–21647–00 | D – 3 |
| 4XY–21649–00 | E – 14 |
| 5SL–21649–00 | C – 15 |
| | F – 3 |
| 5SL–21650–00 | D – 7 |
| 5SL–21669–00 | D – 4 |
| 5SL–21688–00 | D – 4 |
| 5SL–21689–00 | D – 4 |

NUMERICAL INDEX


| PART NO. | GRID NO. |
|---|---|
| 5SL–2172E–00 | D – 5 |
| 5SL–2172W–00 | D – 5 |
| 5MT–2172X–00 | D – 3 |
| 5SL–2173L–40 | D – 5 |
| 5SL–2173L–50 | D – 5 |
| 5SL–21746–00 | D – 5 |
| 5PW–2174X–00 | D – 5 |
| 26H–21828–00 | D – 5 |
| 5SL–21871–00 | D – 5 |
| 4NK–21875–00 | D – 5 |
| 5SL–22110–01 | D – 6 |
| 5PW–22125–00 | D – 7 |
| 5JJ–22128–00 | D – 6 |
| 4FN–22141–00 | D – 7 |
| 5SL–22151–00 | D – 6 |
| 5SL–2217A–10 | D – 6 |
| 5SL–2217M–10 | D – 6 |
| 5EB–22184–00 | D – 6 |
| 5SL–22187–00 | E – 9 |
| 5SL–2219X–00 | D – 6 |
| 5SL–22210–30 | D – 8 |
| 5SL–22219–00 | D – 8 |
| 5SL–22311–00 | D – 6 |
| 5SL–22381–00 | D – 6 |
| 5SL–22906–00 | D – 12 |
| 5SL–23102–20 | D – 10 |
| 5SL–23103–20 | D – 10 |
| 5SL–23110–20 | D – 10 |
| 5SL–23111–21 | D – 10 |
| 5VY–23118–00 | D – 10 |
| 5SL–23120–20 | D – 10 |
| 5SL–23136–21 | D – 10 |
| 5SL–23141–20 | D – 10 |
| 4EB–23144–00 | D – 10 |
| 4XV–23145–00 | D – 10 |
| 5JJ–23146–00 | D – 10 |
| 3XJ–23147–L0 | D – 10 |
| 26H–23156–00 | D – 10 |
| 509–23158–L0 | D – 10 |
| 5SL–23170–20 | D – 10 |
| 5UX–23181–00 | D – 10 |
| 5SL–23340–20 | D – 11 |
| 3LC–23357–00 | D – 10 |
| 5SL–23377–10 | F – 13 |
| 4XV–23415–01 | D – 9 |
| 4XV–23418–00 | D – 9 |
| 4XV–2341B–00 | D – 9 |
| 5SL–23435–20 | D – 9 |

| PART NO. | GRID NO. |
|---|---|
| 3FV–23462–00 | D – 11 |
| 2H9–23469–00 | E – 6 |
| 5SL–23818–10 | D – 9 |
| 5SL–24129–00 | D – 12 |
| 5SL–24139–00 | D – 13 |
| 5SL–2413B–00 | D – 12 |
| 5SL–2414H–00 | D – 13 |
| 5SL–2414J–00 | D – 13 |
| 5SL–2414K–00 | D – 13 |
| 5SL–24182–00 | D – 12 |
| 5SL–24183–00 | D – 12 |
| 5SL–24191–00 | D – 12 |
| 5PW–24192–00 | D – 12 |
| 68V–24376–00 | B – 15 |
| 5SL–24411–00 | B – 14 |
| 5JW–24486–00 | D – 12 |
| 5SL–24491–10 | D – 12 |
| 3LN–24515–00 | B – 14 |
| 5JJ–24602–00 | D – 12 |
| 5SL–2470F–00 | D – 14 |
| 5SL–24710–00 | D – 14 |
| 5SL–24720–00 | D – 14 |
| 3KJ–24723–00 | C – 15 |
| | D – 3 |
| 5SL–24723–00 | D – 14 |
| 5SL–24724–00 | D – 14 |
| 5SL–24750–00 | D – 14 |
| 5SL–24751–00 | D – 14 |
| 5SL–24758–00 | D – 14 |
| 5SL–24780–00 | D – 14 |
| 5SL–24792–00 | D – 14 |
| 5SL–2479R–00 | D – 14 |
| 5SL–24858–00 | D – 14 |
| 4XV–25117–00 | D – 15 |
| 4XV–25118–00 | D – 15 |
| 5SL–25168–00–0X | D – 15 |
| 5SL–25168–00–98 | D – 15 |
| 5PW–25181–00 | D – 15 |
| 4XV–25186–00 | D – 15 |
| 5PW–25188–00 | D – 15 |
| 4XV–25317–00 | E – 3 |
| 5SL–25327–00 | E – 3 |
| 5SL–25338–00–0X | E – 3 |
| 5SL–25338–00–98 | E – 3 |
| 5SL–25364–00 | E – 3 |
| 5SL–25366–00 | E – 3 |
| 5SL–25367–00 | E – 3 |
| 4XV–25376–00 | E – 3 |

| PART NO. | GRID NO. |
|---|---|
| 5SL–25376–00 | E – 3 |
| 5SL–25381–00 | E – 4 |
| 5SL–25383–00 | E – 3 |
| 5SL–25388–00 | E – 3 |
| 5SL–25389–00 | E – 4 |
| 5MT–25398–00 | D – 15 |
| | E – 3 |
| 5MT–25398–10 | D – 15 |
| | E – 3 |
| 5MT–25398–20 | D – 15 |
| | E – 3 |
| 5SL–25448–20 | E – 3 |
| 5SL–2580T–10 | E – 2 |
| 5SL–2580U–10 | E – 2 |
| 5SL–2580W–00 | E – 5 |
| 5SL–2581T–10 | E – 2 |
| 5SL–25827–00 | E – 5 |
| 5SL–25827–10 | E – 5 |
| 5SL–25828–00 | E – 5 |
| 5SL–2582A–00 | E – 12 |
| 5SL–2582W–00 | E – 5 |
| 5SL–25838–00 | E – 5 |
| 5VY–2583B–00 | E – 2 |
| 5SL–2583V–00 | E – 12 |
| 5SL–25852–00 | E – 12 |
| 5VY–25852–00 | E – 7 |
| 5SL–25854–00 | E – 12 |
| 5VY–25854–00 | E – 7 |
| 5SL–25855–00 | E – 12 |
| 5VY–25855–00 | E – 7 |
| 4BP–2585F–00 | E – 12 |
| 5VS–2585H–00 | E – 7 |
| 5VS–25867–00 | E – 7 |
| 5VS–2586F–00 | E – 7 |
| 5SL–25872–10 | E – 7 |
| 5SL–25874–00 | E – 12 |
| 5SL–25886–10 | E – 7 |
| 5SL–25887–10 | E – 7 |
| 5SL–25894–00 | E – 12 |
| 5SL–25894–20 | E – 7 |
| 5SL–25895–00 | E – 12 |
| 5SL–25895–20 | E – 7 |
| 5VY–2589F–01 | E – 7 |
| 5VY–2589G–00 | E – 7 |
| 5VY–2589H–00 | E – 7 |
| 5SL–25914–00 | E – 5 |
| 5DH–25916–00 | E – 5 |
| 3JD–25917–00 | E – 5 |

| PART NO. | GRID NO. |
|---|---|
| 5SL–25917–00 | E – 5 |
| 4SV–25919–00 | E – 2 |
| 5SL–25919–00 | E – 5 |
| 5SL–25921–00 | E – 5 |
| 4SV–25924–00 | E – 2 |
| 8CR–25924–00 | E – 5 |
| 3GM–25925–00 | E – 2 |
| 5SL–25926–00 | E – 5 |
| 5VY–25975–00 | E – 7 |
| 5SL–26121–10 | E – 6 |
| 5SL–26122–10 | E – 6 |
| 5SL–26240–01 | E – 6 |
| 4YR–26241–02 | E – 6 |
| 5EB–26246–00 | E – 6 |
| 5SL–26280–00 | E – 15 |
| 5SL–26290–00 | E – 15 |
| 5SL–26292–10 | E – 7 |
| 5SL–26298–00 | E – 15 |
| 5SL–26311–00 | E – 6 |
| 5SL–26312–00 | E – 6 |
| 5VS–26332–00 | E – 7 |
| 5SL–26335–20 | E – 6 |
| 5SL–27211–00 | E – 12 |
| 5SL–27222–00 | E – 12 |
| 5SL–27311–10 | E – 9 |
| 5JJ–27315–00 | E – 9 |
| 5SL–27321–00 | E – 9 |
| 4NX–27351–00 | E – 9 |
| 5PW–27352–00 | E – 9 |
| 5JJ–27411–01 | E – 10 |
| 1HX–27415–00 | F – 3 |
| 5SL–27424–00 | E – 11 |
| 5SL–27430–00 | E – 10 |
| 4BP–27434–01 | E – 9 |
| 5JJ–27437–00 | E – 10 |
| 5SL–27440–00 | E – 10 |
| 5SL–27442–00 | E – 9 |
| 5SL–27443–00 | E – 10 |
| 5SL–27445–00 | E – 9 |
| 5SL–27446–00 | E – 10 |
| 5SL–27451–00 | E – 9 |
| 5SL–27461–00 | E – 10 |
| 5SL–28100–00 | D – 4 |
| 5SL–2832P–00 | E – 14 |
| 5SL–28330–01–P0 | E – 14 |
| 5SL–28330–01–P1 | E – 14 |
| 5SL–28330–01–P5 | E – 14 |
| 5SL–2834C–B0 | F – 2 |

| PART NO. | GRID NO. |
|---|---|
| 5SL–2834C–C0 | F – 2 |
| 5SL–2834C–D0 | F – 2 |
| 1AE–2834E–00 | D – 3 |
| 5SL–2834E–00 | F – 3 |
| 5SL–2834F–00 | F – 3 |
| 5SL–28356–00 | E – 14 |
| 5EB–2836A–00 | B – 11 |
| 5EB–2836E–00 | B – 11 |
| 5SL–2836K–00 | F – 2 |
| 5SL–2836L–00 | F – 2 |
| 5SL–2836M–10 | F – 4 |
| 5SL–2836T–00 | F – 2 |
| 5SL–2836U–00 | F – 2 |
| 5SL–28371–00 | E – 15 |
| 5SL–2837J–00 | F – 3 |
| 5SL–2837K–00 | F – 4 |
| 5SL–2837L–01 | E – 14 |
| 5SL–2837M–01 | E – 14 |
| 5SL–2837N–00 | F – 9 |
| 5SL–2838E–00 | E – 15 |
| 5SL–2838G–00 | F – 4 |
| 5SL–2838R–00 | E – 15 |
| 5SL–2838T–00 | E – 15 |
| 5SL–28391–30 | F – 2 |
| 5SL–28391–40 | F – 2 |
| 5SL–28392–30 | F – 2 |
| 5SL–28392–40 | F – 2 |
| 5SL–283A1–00 | F – 3 |
| 5SL–283A2–00 | F – 4 |
| 5SL–28415–00 | C – 15 |
| 5SL–28416–00 | E – 14 |
| 5SL–28428–00 | E – 14 |
| 5SL–28429–00 | E – 14 |
| 5SL–2843J–00 | F – 3 |
| 5SL–2844J–00 | F – 3 |
| 5SL–2848K–00 | F – 4 |
| 5SL–81410–00 | F – 5 |
| 5SL–81450–01 | F – 5 |
| 5SL–81670–00 | F – 12 |
| 5SL–81673–00 | F – 12 |
| 4WP–81801–00 | F – 6 |
| 4WP–81826–00 | F – 6 |
| 4XV–8182A–00 | F – 6 |
| 5SL–8183G–00 | F – 6 |
| 4WP–81844–00 | F – 6 |
| 1FK–81847–00 | F – 6 |
| 5EB–81890–00 | F – 6 |
| 5SL–81940–11 | F – 13 |

| PART NO. | GRID NO. |
|---|---|
| 5EA–81950–20 | F – 12 |
| 5JJ–81950–20 | F – 12 |
| 5VK–81950–40 | F – 12 |
| 5EA–81952–00 | F – 12 |
| 5JJ–81952–00 | F – 12 |
| 5SL–81960–00 | F – 13 |
| 5FL–82100–01 | F – 13 |
| 5SL–82113–00 | F – 14 |
| 5SL–82116–01 | F – 13 |
| 5SL–82119–10 | F – 13 |
| 5SL–8212B–01 | D – 3 |
| 5JJ–82131–00 | D – 4 |
| 5EA–82151–00 | F – 13 |
| 5JJ–82151–10 | F – 13 |
| 5JJ–82151–20 | F – 13 |
| 5JJ–82151–30 | F – 13 |
| 5SL–82309–12 | F – 12 |
| 5SL–82310–20 | F – 12 |
| 5JW–82380–00 | B – 14 |
| 5VX–82380–00 | F – 12 |
| 5SL–82386–00 | B – 15 |
| 5JJ–82388–00 | F – 14 |
| 5SL–82511–08 | F – 14 |
| 5SL–82530–00 | F – 13 |
| 3GB–82540–01 | F – 12 |
| 5SL–82541–00 | F – 12 |
| 5SL–8255P–00 | F – 14 |
| 5PX–82566–71 | F – 14 |
| 5PS–82576–01 | F – 13 |
| 5SL–8258J–00 | D – 2 |
| 5SL–82590–40 | F – 13 |
| 3MA–82591–00 | E – 7 |
| | F – 13 |
| 5SL–8259J–00 | D – 2 |
| 5EB–82910–04 | F – 11 |
| 4XV–82917–01 | F – 11 |
| 5PW–83310–01 | F – 7 |
| 1KH–83311–00 | F – 7 |
| 5PW–83318–00 | F – 7 |
| 5PW–83320–01 | F – 7 |
| 5PW–83330–00 | F – 7 |
| 5PW–8333A–00 | F – 7 |
| 5PW–83340–00 | F – 7 |
| 5PW–8334A–00 | F – 7 |
| 4GY–83350–00 | F – 12 |
| 4TH–83371–00 | F – 13 |
| 4XV–83513–00 | E – 14 |
| 5PW–8352S–00 | F – 8 |

| PART NO. | GRID NO. |
|---|---|
| 5PW–8353E–00 | F – 8 |
| 5SL–83570–01 | F – 8 |
| 5SL–83570–11 | F – 8 |
| 5PW–83572–00 | F – 8 |
| 5EB–83755–01 | F – 12 |
| 5EB–83912–02 | F – 11 |
| 5JJ–83913–00 | F – 11 |
| 5SL–83922–10 | E – 7 |
| 4XV–83945–00 | F – 11 |
| 5SL–83969–02 | F – 11 |
| 5SL–83975–01 | F – 11 |
| 4HM–83980–00 | E – 7 |
| 5SL–84196–00 | F – 9 |
| 5SL–84300–01 | F – 9 |
| 5SL–84300–11 | F – 9 |
| 5SL–84312–00 | F – 9 |
| 4SV–84314–00 | F – 9 |
| 4SV–84347–00 | F – 9 |
| 5SL–84359–01 | F – 9 |
| 5SL–84396–00 | F – 9 |
| 5SL–84397–00 | F – 9 |
| 1FK–84527–00 | E – 14 |
| 5SL–84710–00 | F – 10 |
| 4HC–84744–00 | F – 10 |
| 5PW–84745–01 | F – 10 |
| 5SL–84753–00 | F – 10 |
| 5SL–85110–00 | D – 4 |
| 3Y6–85130–02 | D – 4 |
| 5SL–85720–01 | F – 12 |
| 8CC–85790–01 | F – 12 |
| 5SL–85885–00 | B – 14 |
| 5CA–85886–00 | B – 12 |
| 5PW–85896–01 | F – 12 |
| 5SL–8591A–A0 | F – 14 |
| 5VY–W0041–00 | E – 7 |
| 5SL–W0042–50 | E – 12 |
| 5SL–W0045–10 | E – 2 |
| 5SL–W0046–00 | E – 5 |
| 5PW–W0047–00 | E – 2 |
| 5SL–W0047–00 | E – 5 |
| 5PW–W0047–10 | E – 2 |
| 1J3–W0048–00 | E – 2 |
| 1UY–W0048–00 | E – 5 |
| 5VY–W0048–00 | E – 7 |
| 5PW–W0057–00 | E – 2 |
| 5SL–W0057–00 | E – 5 |
| 5PW–W0057–10 | E – 2 |
| 5SL–W2470–00 | D – 14 |

| PART NO. | GRID NO. |
|---|---|
| 5SL–W2587–00 | E – 7 |
| 5SL–W8250–A0 | F – 14 |
| 5SL–Y2171–50–P4 | D – 5 |
| 5SL–Y2171–C0–P0 | D – 5 |
| 5SL–Y2171–E0–P1 | D – 5 |
| 5SL–Y2808–60–P0 | F – 3 |
| 5SL–Y2808–70–P1 | F – 3 |
| 5SL–Y2808–80–P0 | F – 3 |
| 5SL–Y2809–60–P0 | F – 3 |
| 5SL–Y2809–70–P1 | F – 3 |
| 5SL–Y2809–80–P0 | F – 3 |
| 5SL–Y283U–F0–P2 | F – 2 |
| 5SL–Y283U–G0–P1 | F – 2 |
| 5SL–Y283U–H0–P0 | F – 2 |
| 5SL–Y283V–F0–P2 | F – 2 |
| 5SL–Y283V–G0–P1 | F – 2 |
| 5SL–Y283V–H0–P0 | F – 2 |
| 5SL–Y2881–00 | E – 14 |
| 5SL–YK241–30–P0 | D – 12 |
| 5SL–YK241–30–P2 | D – 12 |
| 5SL–YK241–30–P5 | D – 12 |
| 90101–08662 | E – 9 |
| 90101–08766 | E – 4 |
| 90105–06006 | C – 4 |
| 90105–06020 | C – 2 |
| 90105–06027 | B – 2 |
| 90105–06040 | B – 8 |
| 90105–06053 | B – 7 |
| 90105–07004 | B – 6 |
| 90105–08052 | E – 14 |
| 90105–08053 | E – 11 |
| 90105–08054 | C – 3 |
| 90105–08386 | F – 12 |
| 90105–086A9 | C – 4 |
| 90105–087A0 | C – 4 |
| 90105–10017 | D – 6 |
| | D – 8 |
| 90105–10018 | D – 7 |
| 90105–10042 | C – 15 |
| 90105–106A2 | D – 2 |
| 90105–126A8 | F – 5 |
| 90105–14002 | D – 15 |
| 90109–06013 | E – 12 |
| 90109–06014 | C – 6 |
| 90109–06015 | C – 6 |
| 90109–06031 | B – 10 |
| | C – 6 |
| 90109–064G6 | E – 2 |

| PART NO. | GRID NO. |
|---|---|
| 90109–065G3 | C – 4 |
| 90109–066F0 | B – 2 |
| 90109–08018 | E – 9 |
| 90109–08045 | E – 5 |
| 90109–080G5 | F – 13 |
| 90109–085G6 | E – 10 |
| 90109–105G7 | E – 9 |
| 90110–05014 | D – 12 |
| 90110–05112 | D – 12 |
| 90110–05201 | D – 5 |
| 90110–06018 | C – 13 |
| 90110–06020 | B – 11 |
| 90110–06041 | B – 10 |
| 90110–06071 | C – 6 |
| 90110–06079 | D – 12 |
| 90110–06091 | C – 4 |
| 90110–06102 | D – 6 |
| 90110–06117 | F – 12 |
| 90110–06118 | B – 2 |
| 90110–06125 | F – 12 |
| 90110–06149 | B – 7 |
| 90110–06258 | D – 14 |
| 90110–08220 | E – 11 |
| 90110–10007 | C – 15 |
| 90110–10008 | C – 15 |
| 90111–05002 | D – 5 |
| | F – 3 |
| 90111–05003 | E – 15 |
| | F – 2 |
| 90111–05006 | C – 15 |
| 90111–06007 | D – 3 |
| 90111–06019 | C – 14 |
| 90111–06030 | D – 3 |
| 90111–06038 | D – 6 |
| 90111–06040 | F – 2 |
| 90111–06041 | E – 8 |
| 90111–06043 | D – 3 |
| 90116–10485 | E – 3 |
| 90119–05001 | E – 15 |
| 90119–06059 | D – 5 |
| 90119–06062 | D – 12 |
| 90119–06117 | D – 9 |
| 90119–06172 | B – 13 |
| 90119–06192 | E – 9 |
| 90119–10003 | B – 2 |
| 90149–05244 | E – 7 |
| 90149–06018 | F – 5 |
| 90149–06020 | C – 4 |

| PART NO. | GRID NO. |
|---|---|
| 90149–06031 | F – 5 |
| 90149–06233 | E – 9 |
| 90149–08003 | F – 5 |
| 90149–08296 | E – 10 |
| 90149–10006 | C – 15 |
| 90149–10007 | C – 15 |
| 90150–04041 | D – 4 |
| 90150–05024 | E – 14 |
| 90151–06008 | C – 11 |
| 90154–05012 | D – 12 |
| 90157–06077 | C – 6 |
| 90159–06002 | C – 9 |
| 90159–06056 | E – 12 |
| 90160–05006 | F – 8 |
| | F – 9 |
| 90160–05007 | E – 14 |
| 90167–05078 | E – 14 |
| 90170–08358 | C – 14 |
| 90170–20008 | C – 9 |
| 90170–28419 | D – 9 |
| 90176–06008 | E – 15 |
| 90176–06055 | D – 3 |
| 90179–05523 | E – 14 |
| 90179–07652 | B – 3 |
| 90179–08410 | C – 3 |
| 90179–10696 | C – 15 |
| 90179–18667 | C – 12 |
| 90179–30691 | D – 9 |
| 90183–04039 | D – 3 |
| 90183–05024 | E – 14 |
| | F – 3 |
| 90183–05061 | E – 14 |
| | F – 3 |
| 90183–05076 | D – 3 |
| | D – 5 |
| 90183–050A0 | D – 5 |
| | E – 7 |
| 90183–06053 | D – 3 |
| 90185–10009 | E – 3 |
| 90185–18104 | D – 7 |
| 90185–24165 | E – 4 |
| 90201–04018 | D – 4 |
| 90201–042E0 | F – 13 |
| 90201–05725 | D – 4 |
| 90201–06008 | D – 14 |
| 90201–06042 | E – 10 |
| 90201–06071 | B – 8 |
| 90201–06380 | E – 13 |

| PART NO. | GRID NO. |
|---|---|
| 90201–08034 | E – 11 |
| 90201–081R9 | E – 9 |
| 90201–08326 | E – 9 |
| 90201–086J0 | E – 6 |
| 90201–08753 | F – 12 |
| 90201–087K3 | C – 4 |
| 90201–10021 | E – 3 |
| 90201–10118 | E – 8 |
| | E – 12 |
| 90201–101J1 | E – 9 |
| 90201–10614 | C – 9 |
| 90201–12008 | F – 5 |
| 90201–12013 | C – 14 |
| 90201–12790 | F – 12 |
| 90201–13008 | E – 10 |
| 90201–146F9 | E – 9 |
| 90201–154E8 | C – 14 |
| 90201–177G4 | C – 14 |
| 90201–186M4 | D – 7 |
| 90201–20278 | C – 12 |
| 90201–255A6 | C – 9 |
| 90201–257R5 | E – 4 |
| 90201–281U8 | D – 9 |
| 90202–05088 | E – 14 |
| 90202–05180 | E – 15 |
| | F – 2 |
| 90202–06001 | F – 13 |
| 90202–08001 | D – 14 |
| 90202–30235 | D – 9 |
| 90206–12074 | C – 14 |
| 90209–21332 | C – 11 |
| 90209–21351 | C – 11 |
| 90209–22352 | C – 11 |
| 90209–25342 | C – 11 |
| 90209–25349 | C – 11 |
| 90209–25350 | C – 11 |
| 90215–20004 | C – 9 |
| 90215–21290 | C – 12 |
| 90240–08084 | E – 9 |
| 90243–08029 | E – 10 |
| 90269–06001 | F – 10 |
| 90269–06008 | E – 15 |
| | F – 3 |
| | F – 9 |
| 90269–07007 | D – 2 |
| | F – 4 |
| 90269–07010 | D – 5 |
| 90269–07076 | D – 5 |

| PART NO. | GRID NO. |
|---|---|
| 90269–07077 | D – 4 |
| 90338–06018 | D – 3 |
| | D – 5 |
| 90338–08174 | B – 12 |
| 90338–08226 | D – 3 |
| 90338–27007 | C – 15 |
| 90340–14132 | B – 11 |
| 90340–20090 | B – 2 |
| 90340–32004 | C – 6 |
| 90387–050X4 | C – 15 |
| 90387–06009 | D – 6 |
| 90387–06022 | D – 3 |
| 90387–06023 | E – 13 |
| 90387–06054 | D – 12 |
| 90387–06055 | D – 12 |
| 90387–06057 | E – 7 |
| | E – 15 |
| | F – 2 |
| 90387–062X0 | D – 6 |
| 90387–065G0 | D – 4 |
| 90387–065J6 | B – 12 |
| | D – 3 |
| 90387–06681 | D – 6 |
| 90387–06697 | E – 10 |
| 90387–07391 | B – 8 |
| 90387–073M0 | E – 9 |
| 90387–07717 | D – 7 |
| 90387–08020 | E – 11 |
| 90387–1012A | D – 6 |
| | D – 8 |
| 90387–1013U | D – 7 |
| 90387–2202V | C – 12 |
| 90387–2504A | C – 11 |
| 90387–2513E | C – 11 |
| 90387–253M6 | C – 11 |
| 90387–2813C | C – 11 |
| 90387–2813D | C – 11 |
| 90401–10012 | E – 2 |
| 90401–10172 | E – 8 |
| | E – 12 |
| 90401–20145 | B – 11 |
| 90430–06014 | B – 7 |
| 90430–08119 | B – 2 |
| 90430–08143 | C – 6 |
| 90430–10148 | F – 12 |
| 90445–08016 | B – 8 |
| 90445–08376 | D – 5 |
| 90445–11795 | B – 12 |

| PART NO. | GRID NO. |
|---|---|
| 90445–19002 | E – 9 |
| 90446–08001 | E – 12 |
| 90446–15386 | E – 12 |
| 90450–22017 | B – 7 |
| | B – 9 |
| 90450–32001 | B – 7 |
| | B – 9 |
| 90450–35001 | B – 7 |
| | B – 8 |
| 90450–38040 | B – 7 |
| 90450–53002 | B – 12 |
| 90450–63003 | B – 12 |
| 90460–59211 | E – 15 |
| 90461–10006 | C – 6 |
| 90461–10009 | D – 12 |
| 90464–07259 | D – 3 |
| 90464–12036 | D – 2 |
| 90464–13073 | F – 13 |
| 90464–13077 | F – 13 |
| 90464–13249 | D – 3 |
| 90464–15157 | E – 6 |
| 90464–15195 | D – 2 |
| | E – 6 |
| | F – 13 |
| 90464–16005 | B – 15 |
| 90464–16011 | D – 6 |
| 90464–16012 | D – 6 |
| 90464–28002 | B – 9 |
| 90464–28003 | C – 2 |
| 90465–08395 | C – 6 |
| 90465–10030 | B – 11 |
| 90465–14011 | C – 6 |
| 90467–010A0 | E – 12 |
| 90467–08003 | D – 5 |
| 90467–08075 | B – 8 |
| 90467–10008 | D – 12 |
| 90467–10041 | B – 12 |
| 90467–11090 | B – 9 |
| 90467–12003 | B – 15 |
| 90467–120A3 | E – 7 |
| 90467–14015 | C – 4 |
| 90467–15001 | B – 14 |
| 90467–15012 | B – 14 |
| 90467–15054 | B – 12 |
| 90467–17128 | B – 13 |
| | C – 2 |
| 90467–180A0 | C – 2 |
| 90467–18172 | C – 2 |

| PART NO. | GRID NO. |
|---|---|
| 90467–200A0 | B – 9 |
| 90480–12072 | D – 3 |
| 90480–12314 | B – 12 |
| 90480–12607 | E – 13 |
| 90480–13398 | C – 15 |
| 90480–14003 | F – 2 |
| 90480–15363 | B – 8 |
| 90480–15483 | D – 12 |
| 90501–064L1 | C – 13 |
| 90501–12743 | E – 10 |
| 90501–237L0 | C – 9 |
| 90506–14003 | C – 14 |
| 90506–18008 | E – 9 |
| 90506–20193 | E – 12 |
| 90508–165B1 | C – 10 |
| 90508–18134 | E – 9 |
| 90508–18135 | E – 10 |
| 90508–295B2 | C – 14 |
| 90560–25270 | C – 9 |
| 91314–06025 | C – 4 |
| | C – 6 |
| 91314–06035 | E – 10 |
| 91314–08030 | D – 9 |
| | D – 11 |
| | E – 6 |
| 91314–08040 | D – 10 |
| 91317–04025 | F – 13 |
| 91317–05010 | D – 12 |
| 91317–05012 | C – 15 |
| | D – 3 |
| 91317–05014 | E – 6 |
| 91317–06012 | E – 9 |
| | F – 13 |
| 91317–06016 | F – 12 |
| 91317–06020 | B – 8 |
| | B – 12 |
| | E – 6 |
| 91317–06025 | B – 6 |
| | B – 11 |
| 91317–06060 | B – 2 |
| 91380–06012 | F – 13 |
| 91401–16012 | E – 12 |
| 91401–25015 | E – 9 |
| 91701–06018 | E – 12 |
| 91808–17032 | B – 10 |
| 92014–08014 | C – 6 |
| 92017–05016 | F – 12 |
| 92017–05030 | F – 14 |

| PART NO. | GRID NO. |
|---|---|
| 92017–06014 | D – 14 |
| 92017–06016 | D – 6 |
| | E – 13 |
| 92017–06020 | D – 4 |
| 92017–06025 | D – 14 |
| | F – 13 |
| 92907–05100 | B – 14 |
| 92907–05600 | B – 14 |
| 92907–06200 | E – 12 |
| 92907–08600 | C – 9 |
| 93101–12004 | C – 14 |
| 93101–12173 | B – 7 |
| 93102–15212 | C – 9 |
| 93102–35423 | C – 12 |
| 93106–28043 | D – 15 |
| 93106–40013 | E – 3 |
| 93109–17071 | D – 6 |
| | D – 8 |
| 93210–04092 | C – 4 |
| 93210–06667 | B – 10 |
| 93210–09165 | B – 10 |
| | C – 5 |
| 93210–14003 | B – 10 |
| 93210–14579 | C – 4 |
| 93210–15566 | B – 11 |
| 93210–16325 | C – 4 |
| 93210–27194 | C – 6 |
| 93210–32172 | C – 6 |
| 93210–33133 | B – 7 |
| 93210–47675 | B – 7 |
| 93306–00106 | B – 7 |
| 93306–00304 | C – 9 |
| 93306–00420 | D – 15 |
| 93306–20464 | C – 11 |
| 93306–20531 | E – 3 |
| 93306–30525 | C – 11 |
| 93306–30546 | C – 11 |
| 93310–340N8 | C – 9 |
| 93315–31502 | C – 9 |
| 93315–31758 | D – 6 |
| | D – 8 |
| 93315–41762 | D – 6 |
| 93315–42536 | D – 6 |
| 93317–11020 | C – 9 |
| 93317–11287 | C – 14 |
| 93317–42550 | D – 6 |
| 93317–43580 | E – 3 |
| 93399–99932 | D – 11 |

| PART NO. | GRID NO. |
|---|---|
| 93399–99955 | D – 9 |
| 93420–61M07 | E – 3 |
| 93440–10153 | B – 2 |
| 93440–25186 | C – 11 |
| 93440–28062 | C – 11 |
| 93450–17129 | B – 3 |
| 93501–04011 | E – 10 |
| 93607–44190 | B – 6 |
| 93608–17263 | C – 6 |
| 93900–00030 | D – 15 |
| | E – 3 |
| 94112–17079 | D – 15 |
| 94118–17061 | E – 3 |
| 94580–25080 | B – 10 |
| 94591–49120 | B – 6 |
| 94681–55031 | E – 4 |
| 94701–00402 | B – 2 |
| 95024–06020 | B – 7 |
| 95024–08035 | C – 3 |
| 95027–06008 | F – 13 |
| 95027–06016 | F – 12 |
| 95027–06020 | E – 8 |
| | F – 11 |
| 95027–06040 | F – 6 |
| 95027–08012 | B – 2 |
| 95304–06700 | C – 14 |
| 95307–08600 | E – 4 |
| 95307–08700 | E – 12 |
| 95604–06200 | E – 10 |
| 95604–08200 | E – 11 |
| 95607–04100 | D – 4 |
| 95607–05100 | D – 4 |
| 95607–05200 | F – 14 |
| 95607–06100 | F – 11 |
| 95607–06200 | D – 14 |
| 95607–10200 | C – 15 |
| | D – 6 |
| | D – 8 |
| | E – 9 |
| 95607–14200 | D – 8 |
| 95617–08625 | B – 2 |
| 95707–05500 | D – 4 |
| 95707–06500 | D – 3 |
| 95807–06010 | F – 13 |
| 95814–08045 | C – 3 |
| 95817–06045 | C – 4 |
| 95817–06055 | C – 4 |
| 95817–06065 | C – 4 |

| PART NO. | GRID NO. |
|---|---|
| 95817–06100 | C – 4 |
| 95817–08065 | C – 4 |
| 95824–06020 | C – 14 |
| 95827–06012 | B – 8 |
| 95827–06090 | D – 12 |
| 97706–04012 | F – 7 |
| | F – 10 |
| 97707–50016 | E – 14 |
| | F – 4 |
| 97707–50120 | B – 12 |
| 97707–60020 | D – 3 |
| 98507–04010 | F – 11 |
| 98507–05008 | B – 14 |
| 98507–05016 | B – 14 |
| 98507–05025 | B – 12 |
| | F – 11 |
| 98507–05030 | F – 11 |
| 98507–05035 | F – 11 |
| 98707–03016 | F – 11 |
| 98907–05008 | D – 12 |
| 99001–07600 | C – 9 |
| 99001–09600 | C – 9 |
| 99009–12400 | B – 7 |
| 99009–17400 | C – 14 |
| 99241–00080 | D – 5 |
| 99241–00280 | F – 3 |
| 99244–00080 | D – 5 |
| 99247–00080 | D – 5 |
| 99247–00280 | F – 3 |
| 99530–08012 | B – 11 |
| | C – 6 |
| 99530–10014 | C – 4 |
| 99530–10114 | B – 2 |
| 9Y581–55115 | E – 4 |

| PART NO. | GRID NO. |
|---|---|